1. ALL INFORMATION COMPILED FOR USERS OF FORUM HTTP://WWW.MOBILEGSM.IN.UA

PCB 820-00863-09 X891 Qualcomm Edition TOP MLB

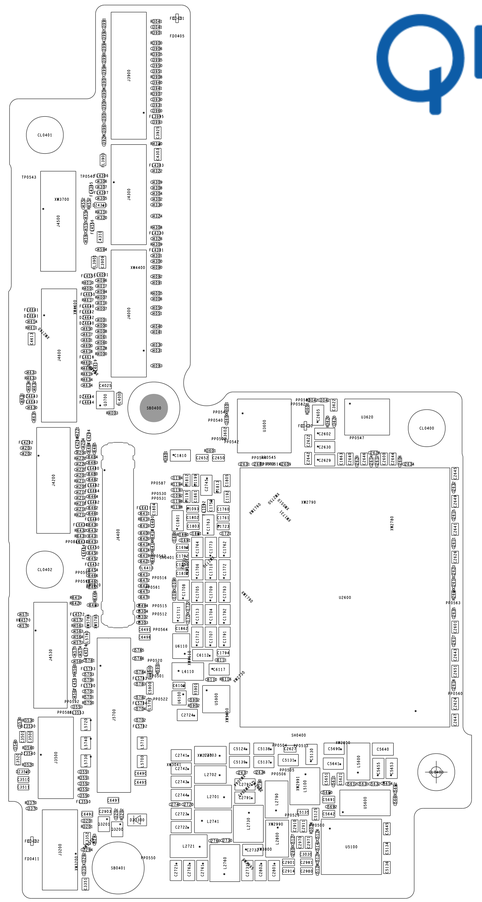

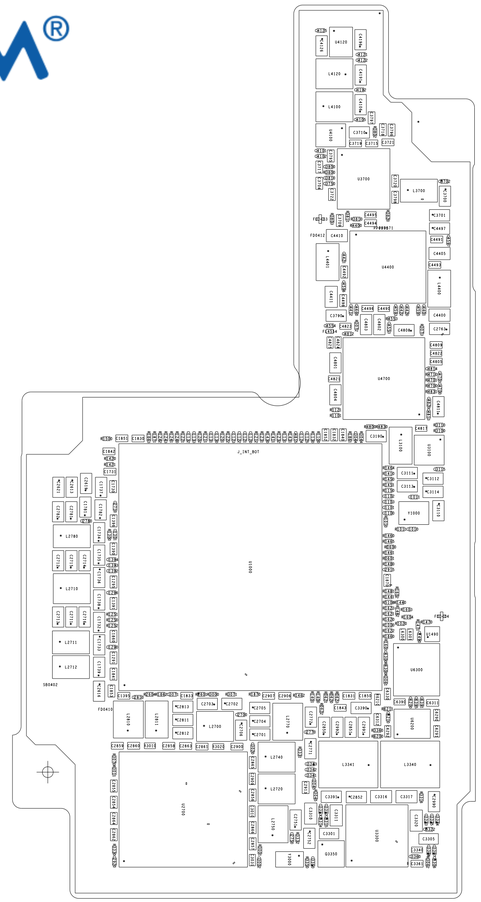

TOP BOTTOM SIDE ASSEMBLY

APPLE				TITLE PCBF, X891 TOP MLB
THIS IS THE PROPERTY OF APPLE AND IT MUST BE RETURNED				
ORIG DIV	DESIGNER	DATE	SCALE	DRAWING NUMBER
	KEN KIPLINGER	03/31/17	1:1	820-00863-09

NOTES:
ARTWORK VIEWED FROM COMPONENT SIDE. PCB SHALL CONFORM TO STANDARDS AS DEFINED IN APPLE SPECIFICATION 080-2265 (FLEXIBLE PRINTED CIRCUIT BOARDS) OR 062-0073 (MULTI- LAYER BOARDS) AS APPLICABLE.

NOTICE OF PROPRIETARY PROPERTY
THE INFORMATION CONTAINED HEREIN IS THE PROPRIETARY PROPERTY OF APPLE
THE POSSESSOR AGREES TO THE FOLLOWING
(I) TO MAINTAIN THIS DOCUMENT IN CONFIDENCE
(II) NOT TO REPRODUCE OR COPY IT
(III) NOT TO REVEAL OR PUBLISH IT

1. ALL INFORMATION COMPILED FOR USERS OF FORUM HTTP://WWW.MOBILEGSM.IN.UA

PCB 820-00864-06 X891 Qualcomm Edition TOP MLB

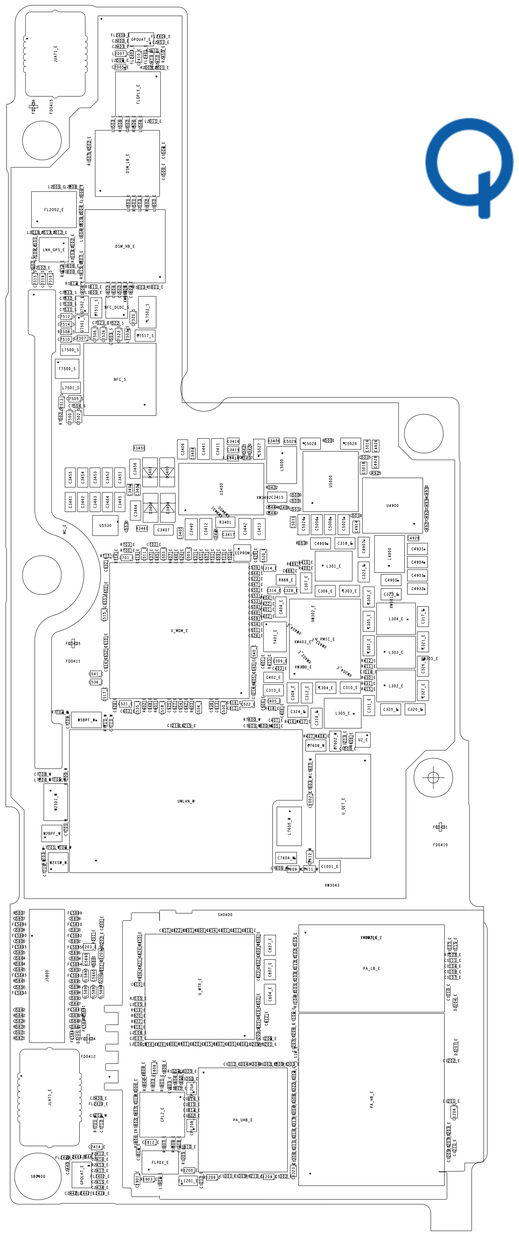

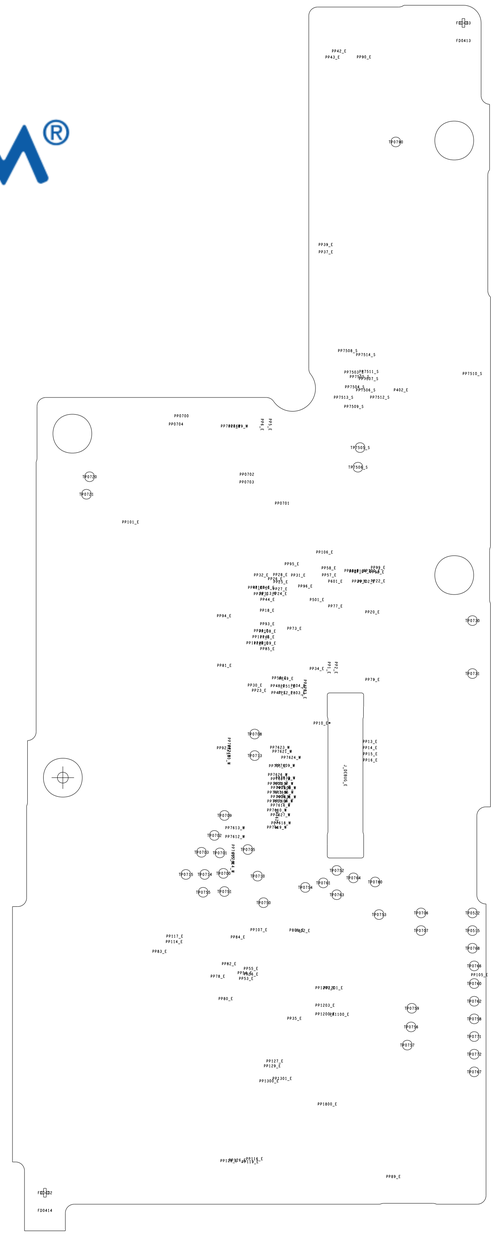

TOP BOTTOM SIDE ASSEMBLY

APPLE				TITLE PCBF, X891 BOTTOM MLB
THIS IS THE PROPERTY OF APPLE AND IT MUST BE RETURNED				
ORIG DIV	DESIGNER	DATE	SCALE	DRAWING NUMBER
	GERA DANILOV	04/05/17	1:1	820-00864-06

NOTES:
ARTWORK VIEWED FROM COMPONENT SIDE. PCB SHALL CONFORM TO STANDARDS AS DEFINED IN APPLE SPECIFICATION 080-2265 (FLEXIBLE PRINTED CIRCUIT BOARDS) OR 062-0073 (MULTI- LAYER BOARDS) AS APPLICABLE.

NOTICE OF PROPRIETARY PROPERTY
THE INFORMATION CONTAINED HEREIN IS THE PROPRIETARY PROPERTY OF APPLE
THE POSSESSOR AGREES TO THE FOLLOWING
(I) TO MAINTAIN THIS DOCUMENT IN CONFIDENCE
(II) NOT TO REPRODUCE OR COPY IT
(III) NOT TO REVEAL OR PUBLISH IT

1. ALL RESISTANCE VALUES ARE IN OHMS, 0.1 WATT +/- 5%.
2. ALL CAPACITANCE VALUES ARE IN MICROFARADS.
3. ALL CRYSTALS & OSCILLATOR VALUES ARE IN HERTZ.

REV	ECN	DESCRIPTION OF REVISION	CK APPD / DATE
9	0008409760	ENGINEERING RELEASED	2017-04-05

X891/X893 MLB Top: EVT

LAST_MODIFICATION=Mon Apr 3 13:03:06 2017

PAGE	CSA	CONTENTS	SYNC	DATE
1	1	TABLE OF CONTENTS		
2	2	SYSTEM:BOM Tables	test_mlb	10/13/2016
3	4	SYSTEM: Mechanical Components		
4	5	SYSTEM: Testpoints (Top)	test_mlb	10/13/2016
5	6	BOOTSTRAPPING	test_mlb	10/13/2016
6	10	SOC: JTAG,USB,XTAL	test_mlb	10/17/2016
7	11	SOC: PCIE	test_mlb	10/17/2016
8	12	SOC: MIPI & ISP	test_mlb	10/13/2016
9	13	SOC: LPDP	test_mlb	10/13/2016
10	14	SOC: Serial	test_mlb	10/17/2016
11	15	SOC: GPIO & UART	test_mlb	10/13/2016
12	16	SOC: AOP	test_mlb	10/17/2016
13	17	SOC: Power (1/3)	test_mlb	10/17/2016
14	18	SOC: Power (2/3)	test_mlb	10/17/2016
15	19	SOC: Power (3/3)	test_mlb	10/17/2016
16	26	NAND	test_mlb	10/13/2016
17	27	SYSTEM POWER: PMU Bucks (1/4)	test_mlb	10/13/2016
18	28	SYSTEM POWER: PMU Bucks (2/4)	test_mlb	10/13/2016
19	29	SYSTEM POWER: PMU LDOs (3/4)	test_mlb	10/13/2016
20	30	SYSTEM POWER: PMU (4/4)	test_mlb	11/01/2016
21	31	SYSTEM POWER: Boost	test_mlb	10/13/2016
22	32	SYSTEM POWER: B2B Battery	test_mlb	10/13/2016
23	33	SYSTEM POWER: Charger	test_mlb	10/13/2016
24	34	SYSTEM POWER: Iktara		
25	35	SYSTEM POWER: B2B Cyclone + Button	test_mlb	10/13/2016
26	36	SENSORS	test_mlb	10/13/2016
27	37	CAMERA: PMU (1/2)	test_mlb	10/13/2016
28	38	CAMERA: PMU (2/2)	test_mlb	10/13/2016
29	39	CAMERA: B2B Wide (WY)	test_mlb	10/13/2016
30	40	CAMERA: B2B Tele (MT)	test_mlb	10/13/2016
31	41	CAMERA: Strobe Drivers	test_mlb	10/13/2016
32	42	CAMERA: B2B FCAM	test_mlb	10/13/2016
33	43	CAMERA: B2B Strobe + Hold Button	test_mlb	10/13/2016
34	44	PEARL: Power	test_mlb	10/13/2016
35	45	PEARL: B2B Romeo + Juliet	test_mlb	10/13/2016
36	46	PEARL: B2B Rosaline + Misc	test_mlb	10/13/2016
37	47	AUDIO: CODEC (1/2)	test_mlb	10/13/2016
38	48	AUDIO: CODEC (2/2)	test_mlb	10/13/2016
39	49	AUDIO: Speaker Amp Bottom		08/25/2015
40	50	AUDIO: Speaker Amp Top		08/25/2015
41	51	ARC: Driver	test_mlb	10/13/2016
42	56	CG: Power Supplies - Touch & Display	test_mlb	10/13/2016
43	57	CG: B2B Display	test_mlb	10/13/2016
44	58	CG: B2B Orb & Touch		08/25/2015
45	59	I/O: Overvoltage Cut-Off Circuit	sync	01/10/2017
46	61	I/O: Accessory Buck	test_mlb	10/17/2016
47	62	I/O: USB PD	test_mlb	10/13/2016
48	63	I/O: Hydra	test_mlb	10/13/2016
49	64	I/O: B2B Dock	test_mlb	10/13/2016
50	65	I/O: Interposer (Bottom)	test_mlb	10/13/2016
51	80	RADIOS		06/04/2015

BOM:639-04583 (Ultimate)
BOM:639-03409 (Extreme)
MCO:056-04077

PART#	QTY	DESCRIPTION	REFERENCE DESIGNATOR(S)	CRITICAL	BOM OPTION
051-02221	1	SCH,MLB_TOP,X891	SCH	NO	COMMON
820-00863	1	PCB,MLB_TOP,X891	PCB	NO	COMMON

TABLE OF CONTENTS

DRAWING TITLE: SCH,MLB,TOP,X891

Apple Inc.

DRAWING NUMBER: 051-02221 SIZE: D
REVISION: 9.0.0
BRANCH: evt-1
PAGE: 1 OF 80
SHEET: 1 OF 51

NOTICE OF PROPRIETARY PROPERTY:
THE INFORMATION CONTAINED HEREIN IS THE PROPRIETARY PROPERTY OF APPLE INC.
THE POSESSOR AGREES TO THE FOLLOWING:
I TO MAINTAIN THIS DOCUMENT IN CONFIDENCE
II NOT TO REPRODUCE OR COPY IT
III NOT TO REVEAL OR PUBLISH IT IN WHOLE OR PART
IV ALL RIGHTS RESERVED

EEEE Codes

PART#	QTY	DESCRIPTION	REFERENCE DESIGNATOR(S)	CRITICAL	BOM OPTION
825-7691	1	EEEE FOR (MLB_TOP,639-04583,ULTIMATE)	EEEE_J2WJ	NO	ULTIMATE
825-7691	1	EEEE FOR (MLB_TOP,639-03409,EXTREME)	EEEE_HP26	NO	EXTREME

SOC

PART#	QTY	DESCRIPTION	REFERENCE DESIGNATOR(S)	CRITICAL	BOM OPTION
339S00358	1	SKYE+3GB, B0, M, DEV	U1000	CRITICAL	COMMON

PART NUMBER	ALTERNATE FOR PART NUMBER	BOM OPTION	REF DES	COMMENTS:
339S00359	339S00358	BOM_TABLE_ALTS	U1000	DDR-H,3G, B0
339S00360	339S00358	BOM_TABLE_ALTS	U1000	DDR-S-20,3G, B0
339S00361	339S00358	BOM_TABLE_ALTS	U1000	DDR-S-18,3G, B0

NAND

Ultimate

PART#	QTY	DESCRIPTION	REFERENCE DESIGNATOR(S)	CRITICAL	BOM OPTION
335S00287	1	HYNIX, 3DV3, ULTIMATE	U2600	CRITICAL	ULTIMATE

PART NUMBER	ALTERNATE FOR PART NUMBER	BOM OPTION	REF DES	COMMENTS:
335S00284	335S00287	BOM_TABLE_ALTS	U2600	TOSHIBA, 1Z, ULTIMATE
335S00285	335S00287	BOM_TABLE_ALTS	U2600	TOSHIBA, BICS3, ULTIMATE
335S00286	335S00287	BOM_TABLE_ALTS	U2600	SANDISK, BICS3, ULTIMATE
335S00288	335S00287	BOM_TABLE_ALTS	U2600	SAMSUNG, 3DV4, ULTIMATE

Extreme

PART#	QTY	DESCRIPTION	REFERENCE DESIGNATOR(S)	CRITICAL	BOM OPTION
335S00240	1	HYNIX, 3DV3, EXTREME	U2600	CRITICAL	EXTREME

PART NUMBER	ALTERNATE FOR PART NUMBER	BOM OPTION	REF DES	COMMENTS:
335S00228	335S00240	BOM_TABLE_ALTS	U2600	TOSHIBA, BICS3, EXTREME
335S00247	335S00240	BOM_TABLE_ALTS	U2600	SANDISK, BICS3, EXTREME
335S00276	335S00240	BOM_TABLE_ALTS	U2600	SAMSUNG, 3DV4, EXTREME

Global Capacitors

PART NUMBER	ALTERNATE FOR PART NUMBER	BOM OPTION	REF DES	COMMENTS:
138S00148	138S00149	BOM_TABLE_ALTS	ALL	0402-3T,10.5uF@1V, Kyocera
138S00150	138S00149	BOM_TABLE_ALTS	ALL	0402-3T,10.5uF@1V, SEMCO
138S00151	138S00149	BOM_TABLE_ALTS	ALL	0402-3T,10.5uF@1V, TY

CRITICAL PART#	COMMENT
138S00149	0402-3T,10.5uF@1V

PART NUMBER	ALTERNATE FOR PART NUMBER	BOM OPTION	REF DES	COMMENTS:
138S00143	138S00144	BOM_TABLE_ALTS	ALL	0402,16uF@1V, Kyocera
138S00163	138S00144	BOM_TABLE_ALTS	ALL	0402,16uF@1V, Taiyo

CRITICAL PART#	COMMENT
138S00144	0402,16uF@1V

PART NUMBER	ALTERNATE FOR PART NUMBER	BOM OPTION	REF DES	COMMENTS:
138S00138	138S00139	BOM_TABLE_ALTS	ALL	0201,3uF@1V, Kyocera
138S00164	138S00139	BOM_TABLE_ALTS	ALL	0201,3uF@1V, Taiyo

CRITICAL PART#	COMMENT
138S00139	0201,3uF@1V

PART NUMBER	ALTERNATE FOR PART NUMBER	BOM OPTION	REF DES	COMMENTS:
138S00145	138S00146	BOM_TABLE_ALTS	ALL	0402,5.1uF@3V, Kyocera
138S00165	138S00146	BOM_TABLE_ALTS	ALL	0402,5.1uF@3V, Taiyo

CRITICAL PART#	COMMENT
138S00146	0402,5.1uF@3V

PART NUMBER	ALTERNATE FOR PART NUMBER	BOM OPTION	REF DES	COMMENTS:
138S00140	138S00141	BOM_TABLE_ALTS	ALL	0201,1.1uF@3V, Kyocera
138S00142	138S00141	BOM_TABLE_ALTS	ALL	0201,1.1uF@3V, SEMCO
138S00166	138S00141	BOM_TABLE_ALTS	ALL	0201,1.1uF@3V, Taiyo

CRITICAL PART#	COMMENT
138S00141	0201,1.1uF@3V

Global Ferrites

PART NUMBER	ALTERNATE FOR PART NUMBER	BOM OPTION	REF DES	COMMENTS:
155S00194	155S0610	BOM_TABLE_ALTS	ALL	FERR BD, 1500HM, TDK
155S00200	155S0610	BOM_TABLE_ALTS	ALL	FERR BD, 1500HM, TY

CRITICAL PART#	COMMENT
155S0610	FERR BD, 1500HM, 01005

Global R/C Alternates

PART NUMBER	ALTERNATE FOR PART NUMBER	BOM OPTION	REF DES	COMMENTS:
118S0764	118S0717	BOM_TABLE_ALTS	ALL	RES, 3.92K, 0.1%, 0201
138S0648	138S0652	BOM_TABLE_ALTS	ALL	CAP,X5R,4.7UF,6.3V,0.65MM,0402,TAIYO
138S0739	138S0706	BOM_TABLE_ALTS	ALL	CAP,CER,X5R,0.22UF,20%,6.3V,20%
132S0436	132S0400	BOM_TABLE_ALTS	ALL	CAP,CER,X5R,0.22UF,20%,6.3V,01005
138S00049	138S0831	BOM_TABLE_ALTS	ALL	CAP,CER,X5R,2.2UF,20%,6.3V,0201

CRITICAL PART#	COMMENT
118S0717	RES, 3.92K, 0.1%, 0201
138S0652	CAP,X5R,4.7UF,6.3V,0.65MM,0402
138S0706	CAP,CER,X5R,0.22UF,20%,6.3V,20%
132S0400	CAP,CER,X5R,0.22UF,20%,6.3V,01005
138S0831	CAP,CER,X5R,2.2UF,20%,6.3V,0201

Global Inductors

PART NUMBER	ALTERNATE FOR PART NUMBER	BOM OPTION	REF DES	COMMENTS:
152S00710	152S00617	BOM_TABLE_ALTS	ALL	IND,MLD,0.1UH,20%,6.1A,29MOHM,H=.65,1608
152S00712	152S00620	BOM_TABLE_ALTS	ALL	IND,MLD,0.1UH,20%,7.2A,17MOHM,H=0.8,2012
152S00713	152S00621	BOM_TABLE_ALTS	ALL	IND,MLD,0.47UH,20%,3.5A,53MO,H=.65,2012
152S00714	152S00622	BOM_TABLE_ALTS	ALL	IND,MLD,1.0UH,20%,2.1A,100MO,H=.65,2012
152S00716	152S00626	BOM_TABLE_ALTS	ALL	IND,MLD,1.5UH,20%,1.1A,160MO,H=.65,2012
152S00717	152S00631	BOM_TABLE_ALTS	ALL	IND,MLD,1.0UH,20%,2.5A,78MO,H=0.8,2012
152S00718	152S00632	BOM_TABLE_ALTS	ALL	IND,MLD,1.0UH,20%,3.2A,60MO,H=0.8,2016
152S00720	152S00640	BOM_TABLE_ALTS	ALL	IND,MLD,0.47UH,3.8A,55MO,H=0.65MM,2012
152S00721	152S00641	BOM_TABLE_ALTS	ALL	IND,MLD,0.47UH,4A,48MO,H=0.8MM,2012
152S00715	152S00623	BOM_TABLE_ALTS	ALL	IND,MLD,1UH,3.6A,60MO,H=0.8MM,2016
152S00653	152S00651	BOM_TABLE_ALTS	ALL	IND,1.2UH,3A,2016,0.65Z
152S00649	152S00650	BOM_TABLE_ALTS	L3340,L3341	IND,0.47UH,6.6A,3225,0.8Z

CRITICAL PART#	COMMENT
152S00617	IND,MLD,0.1UH,20%,6.1A,29MOHM,H=.65,1608
152S00620	IND,MLD,0.1UH,20%,7.2A,17MOHM,H=0.8,2012
152S00621	IND,MLD,0.47UH,20%,3.5A,53MO,H=.65,2012
152S00622	IND,MLD,1.0UH,20%,2.1A,100MO,H=.65,2012
152S00626	IND,MLD,1.5UH,20%,1.1A,160MO,H=.65,2012
152S00631	IND,MLD,1.0UH,20%,2.5A,78MO,H=0.8,2012
152S00632	IND,MLD,1.0UH,20%,3.2A,60MO,H=0.8,2016
152S00640	IND,MLD,0.47UH,3.8A,55MO,H=0.65MM,2012
152S00641	IND,MLD,0.47UH,4A,48MO,H=0.8MM,2012
152S00623	IND,MLD,1UH,3.6A,60MO,H=0.8MM,2016
152S00651	IND,1.2UH, 3A, 2016, 0.65Z
152S00650	IND,0.47UH,6.6A,3225,0.8Z

XTAL Alternate

PART NUMBER	ALTERNATE FOR PART NUMBER	BOM OPTION	REF DES	COMMENTS:
197S0612	197S0446	BOM_TABLE_ALTS	Y1000	XTAL, 24M, 1612

CRITICAL PART#	COMMENT
197S0446	XTAL, 24M, 1612

Multi-Vendor Criticals

CRITICAL PART#	COMMENT
377S0106	SUPPR,TRANS,VARISTOR,12V,33PF,01005
197S0446	XTAL,24MHZ,30PPM,9.5PF,60 OHM MAX,1612
155S0576	FERR BD,10 OHM,50%,750MA,0.07 DCR,01005
155S00168	FLTR,NOISE,65 OHMZ,3.4OHM,0.7-2GHZ,0605
138S0979	CAP,CER,X5R,10UF,20%,10V,0402,H=0.65MM
138S0692	CAP,CER,X5R,1UF,20%,6.3V,0201
138S0683	CAP,CER,X5R,1UF,10%,25V,0402
138S0652	CAP,CER,X5R,4.7UF,20%,6.3V,H=0.65MM,0402
138S00070	CAP,X5R,4.7UF,20%,25V,0402
138S00014	CAP,CER,1UF,20%,16V,X5R,0201,H=0.39MM
132S0664	CAP,CER,0.047UF,10%,25V,X5R,0201
132S0663	CAP,CER,X5R,1UF,10%,25V,0402
132S0534	CAP,CER,X5R,0.1UF,10%,25V,0201
132S0436	CAP,CER,X5R,0.22UF,20%,6.3V,01005
132S0396	CAP,CER,X5R,1000PF,10%,10V,01005
132S0316	CAP,CER,X5R,0.1UF,20%,6.3V,01005
132S0304	CAP,CER,X5R,0.22UF,20%,6.3V,0201
132S0296	CAP,CER,X5R,1000PF,10%,6.3V,01005
132S0318	CAP,CER,X5R,820PF,10%,10V,01005

CRITICAL PART#	COMMENT
132S0288	CAP,CER,X5R,0.1UF,10%,16V,0201
132S0275	CAP,CER,X5R,470PF,10%,10V,01005
132S0249	CAP,CER,X7R,220PF,10%,10V,01005
132S0245	CAP,CER,X5R,0.01UF,10%,6.3V,01005
132S00093	CAP,X5R,0.022UF,20%,6.3V,01005
132S00025	CAP,CER,X5R,0.047UF,20%,6.3V,01005
132S00008	CAP,CER,0.1UF,10%,50V,X7R,0402
131S0883	CAP,CER,NP0/C0G,220PF,2%,50V,0201
131S0804	CAP,CER,27PF,5%,C0G,25V,0201
131S0307	CAP,CER,NP0/C0G,100PF,5%,16V,01005
131S0225	CAP,CER,NP0/C0G,15PF,5%,16V,01005
131S0223	CAP,CER,NP0/C0G,27PF,5%,16V,01005
131S0220	CAP,CER,NP0/C0G,12PF,5%,16V,01005
131S0216	CAP,CER,NP0/C0G,47PF,5%,16V,01005
131S00053	CAP,CER,C0G,220PF,5%,10V,01005
118S00068	RES,MF,1.3 MOHM,1%,200PPM,1/20W,0201
117S0055	RES,MF,1/20W,2M OHM,5,0201,SMD
107S0257	THERMISTOR,NTC,10K OHM,1%,B=3435,01005

Soft-Term Cap Sub BOMs

PART#	QTY	DESCRIPTION	REFERENCE DESIGNATOR(S)	CRITICAL	BOM OPTION
685-00155	1	SUBBOM,MLB,TOP,CAP,TYPICAL,X891	SUBBOM_CAP	CRITICAL	COMMON

Agnes Input

PART#	QTY	DESCRIPTION	REFERENCE DESIGNATOR(S)	CRITICAL	BOM OPTION
138S00159	4	CAP,SOFT-TERM,2.2UF,6.3V,0201,KYOCERA	C2970,C2971,C2980,C2981	CRITICAL	SOFT_CAP
138S0831	4	CAP,TYPICAL,2.2UF,6.3V,0201,MURATA	C2970,C2971,C2980,C2981	CRITICAL	TYPICAL_CAP

Agnes Output

PART#	QTY	DESCRIPTION	REFERENCE DESIGNATOR(S)	CRITICAL	BOM OPTION
138S00159	9	CAP,SOFT-TERM,2.2UF,6.3V,0201,KYOCERA	C2966,C2967,C2968,C2969F,C2970,C2971,C2972,C2973,C2974	CRITICAL	SOFT_CAP
138S0831	9	CAP,TYPICAL,2.2UF,6.3V,0201,MURATA	C2966,C2967,C2968,C2969F,C2970,C2971,C2972,C2973,C2974	CRITICAL	TYPICAL_CAP

Sensors

PART#	QTY	DESCRIPTION	REFERENCE DESIGNATOR(S)	CRITICAL	BOM OPTION
138S00159	2	CAP,SOFT-TERM,2.2UF,6.3V,0201,KYOCERA	C3602,C3622	CRITICAL	SOFT_CAP
138S0831	2	CAP,TYPICAL,2.2UF,6.3V,0201,MURATA	C3602,C3622	CRITICAL	TYPICAL_CAP

RCAM B2Bs

PART#	QTY	DESCRIPTION	REFERENCE DESIGNATOR(S)	CRITICAL	BOM OPTION
138S00159	3	CAP,SOFT-TERM,2.2UF,6.3V,0201,KYOCERA	C3909,C3925,C4025	CRITICAL	SOFT_CAP
138S0831	3	CAP,TYPICAL,2.2UF,6.3V,0201,MURATA	C3909,C3925,C4025	CRITICAL	TYPICAL_CAP

Strobe B2B

PART#	QTY	DESCRIPTION	REFERENCE DESIGNATOR(S)	CRITICAL	BOM OPTION
138S00159	1	CAP,SOFT-TERM,2.2UF,6.3V,0201,KYOCERA	C4303	CRITICAL	SOFT_CAP
138S0831	1	CAP,TYPICAL,2.2UF,6.3V,0201,MURATA	C4303	CRITICAL	TYPICAL_CAP

Audio

PART#	QTY	DESCRIPTION	REFERENCE DESIGNATOR(S)	CRITICAL	BOM OPTION
138S00159	2	CAP,SOFT-TERM,2.2UF,6.3V,0201,KYOCERA	C4809,C4805	CRITICAL	SOFT_CAP
138S0831	2	CAP,TYPICAL,2.2UF,6.3V,0201,MURATA	C4809,C4805	CRITICAL	TYPICAL_CAP

Pearl B2B

PART#	QTY	DESCRIPTION	REFERENCE DESIGNATOR(S)	CRITICAL	BOM OPTION
138S00159	1	CAP,SOFT-TERM,2.2UF,6.3V,0201,KYOCERA	C4613	CRITICAL	SOFT_CAP
138S0831	1	CAP,TYPICAL,2.2UF,6.3V,0201,MURATA	C4613	CRITICAL	TYPICAL_CAP

Acorn

PART#	QTY	DESCRIPTION	REFERENCE DESIGNATOR(S)	CRITICAL	BOM OPTION
138S00160	2	CAP,SOFT-TERM,10UF,10V,0402,MURATA	C5641,C5653	CRITICAL	SOFT_CAP
138S0979	2	CAP,TYPICAL,10UF,10V,0402,MUR/KYO	C5641,C5653	CRITICAL	TYPICAL_CAP

CODEC

PART#	QTY	DESCRIPTION	REFERENCE DESIGNATOR(S)	CRITICAL	BOM OPTION
138S00160	2	CAP,SOFT-TERM,10UF,10V,0402,MURATA	C4811,C4808	CRITICAL	SOFT_CAP
138S0979	2	CAP,TYPICAL,10UF,10V,0402,MUR/KYO	C4811,C4808	CRITICAL	TYPICAL_CAP

Ansel

PART#	QTY	DESCRIPTION	REFERENCE DESIGNATOR(S)	CRITICAL	BOM OPTION
138S00160	1	CAP,SOFT-TERM,10UF,10V,0402,MURATA	C3710	CRITICAL	SOFT_CAP
138S0979	1	CAP,TYPICAL,10UF,10V,0402,MUR/KYO	C3710	CRITICAL	TYPICAL_CAP

PART NUMBER	ALTERNATE FOR PART NUMBER	BOM OPTION	REF DES	COMMENTS:
685-00156	685-00155	BOM_TABLE_ALTS	SUBBOM_CAP	SUBBOM,MLB,TOP,CAP,SOFT,X891

PAGE TITLE

SYSTEM:BOM Tables

Apple Inc.

DRAWING NUMBER 051-02221

SIZE D

REVISION 9.0.0

BRANCH evt-1

PAGE 2 OF 80

SHEET 2 OF 51

NOTICE OF PROPRIETARY PROPERTY:
THE INFORMATION CONTAINED HEREIN IS THE PROPRIETARY PROPERTY OF APPLE INC.
THE POSESSOR AGREES TO THE FOLLOWING:
I TO MAINTAIN THIS DOCUMENT IN CONFIDENCE
II NOT TO REPRODUCE OR COPY IT
III NOT TO REVEAL OR PUBLISH IT IN WHOLE OR PART
IV ALL RIGHTS RESERVED

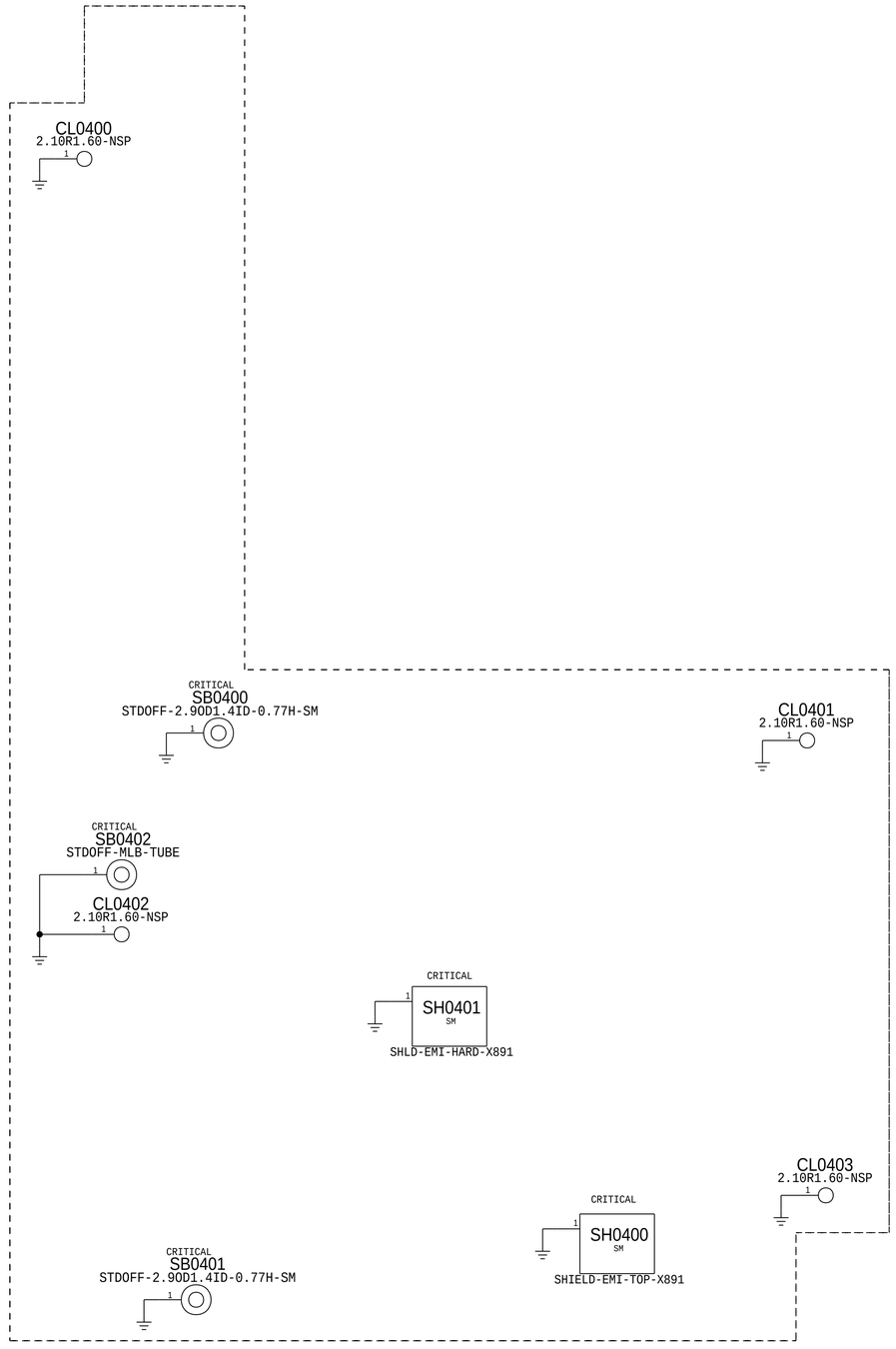

FIDUCIALS

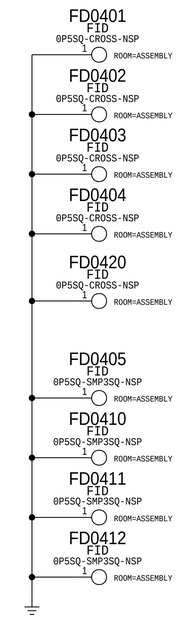

PAGE TITLE
SYSTEM: Mechanical Components

Apple Inc.

DRAWING NUMBER 051-02221
SIZE D
REVISION 9.0.0
BRANCH evt-1
PAGE 4 OF 80
SHEET 3 OF 51

NOTICE OF PROPRIETARY PROPERTY:
THE INFORMATION CONTAINED HEREIN IS THE PROPRIETARY PROPERTY OF APPLE INC.
THE POSESSOR AGREES TO THE FOLLOWING:
I TO MAINTAIN THIS DOCUMENT IN CONFIDENCE
II NOT TO REPRODUCE OR COPY IT
III NOT TO REVEAL OR PUBLISH IT IN WHOLE OR PART
IV ALL RIGHTS RESERVED

Test Points

POWER

PP_ROMEO_DENSE_ANODE	TP0540 P2MM-NSM	ROOM=TEST
PP_ROMEO_CATHODE	TP0543 P2MM-NSM	ROOM=TEST

SOC Debug

AP_TO_PMU_TEST_CLKOUT	PP0500 P2MM-NSM	ROOM=TEST
BOARD_ID0	PP0501 P2MM-NSM	ROOM=TEST
AP_TO_FCAM_SHUTDOWN_L	PP0502 P2MM-NSM	ROOM=TEST
AP_DEBUG3	PP0503 P2MM-NSM	ROOM=TEST
DFU_STATUS	PP0504 P2MM-NSM	ROOM=TEST
PMU_TO_AP_PRE_UVLO_L	PP0505 P2MM-NSM	ROOM=TEST
AP_TO_PMU_SOCHOT_L	PP0506 P2MM-NSM	ROOM=TEST

SOC CPU/GPU

PP_GPU	XW0510 SHORT-10L-0.05MM-SM	PP_GPU_LVCC	
PP_CPU_PCORE	XW0511 SHORT-10L-0.05MM-SM	PP_CPU_PCORE_LVCC	
AP_CPU_PCORE_SENSE	PP0512 P2MM-NSM	ROOM=TEST	
AP_VDD_GPU_SENSE	PP0513 P2MM-NSM	ROOM=TEST	
TP_SOC_SENSE	PP0514 P2MM-NSM	ROOM=TEST	
TP_VSS_CPU_SENSE	PP0515 P2MM-NSM	ROOM=TEST	
TP_VSS_SENSE	PP0516 P2MM-NSM	ROOM=TEST	

PMU

AOP_TO_DDR_SLEEP1_READY	PP0520 P2MM-NSM	ROOM=TEST
SPMI_PMU_BI_PMGR_SDATA	PP0521 P2MM-NSM	ROOM=TEST
PMU_TO_AP_HYDRA_ACTIVE_READY	PP0522 P2MM-NSM	ROOM=TEST

PCIE Refclk

90_PCIE_AP_TO_NAND_REFCLK_P	PP0530 P2MM-NSM	ROOM=TEST
90_PCIE_AP_TO_NAND_REFCLK_N	PP0531 P2MM-NSM	ROOM=TEST

Probe Points

Sensors

SPI_AOP_TO_IMU_SCLK	PP0540 P2MM-NSM	ROOM=TEST
SPI_AOP_TO_IMU_MOSI	PP0541 P2MM-NSM	ROOM=TEST
SPI_IMU_TO_AOP_MISO	PP0542 P2MM-NSM	ROOM=TEST
ACCEL_GYRO_TO_AOP_DATARDY	PP0544 P2MM-NSM	ROOM=TEST
ACCEL_GYRO_TO_AOP_INT	PP0545 P2MM-NSM	ROOM=TEST
COMPASS_TO_AOP_INT	PP0546 P2MM-NSM	ROOM=TEST
PHOSPHORUS_TO_AOP_INT	PP0547 P2MM-NSM	ROOM=TEST

Hydra VBUS

HYDRA_TO_TIGRIS_VBUS1_VALID_L	PP0550 P2MM-NSM	ROOM=TEST

NAND

SWD_AP_BI_NAND_SWDIO	PP0560 P2MM-NSM	ROOM=TEST
SWD_AOP_TO_MANY_SWCLK	PP0561 P2MM-NSM	ROOM=TEST
SPI_S4E_TO_AP_MISO_BOOT_CONFIG2	PP0562 P2MM-NSM	ROOM=TEST
NAND_ANI1_VREF	PP0563 P2MM-NSM	ROOM=TEST
NAND_ANI0_VREF	PP0564 P2MM-NSM	ROOM=TEST

Rigel

CAMPMU_TO_RIGEL_ENABLE	PP0570 P2MM-NSM	ROOM=TEST
RIGEL_TO_ISP_INT	PP0571 P2MM-NSM	ROOM=TEST

PDM_CODEC_TO_ARC_CLK	PP0582 P2MM-NSM	ROOM=TEST
PDM_CODEC_TO_ARC_DATA	PP0583 P2MM-NSM	ROOM=TEST
AP_BI_CCG2_SWDIO	PP0586 P2MM-NSM	ROOM=TEST
AP_TO_CCG2_SWCLK	PP0587 P2MM-NSM	ROOM=TEST

SOC I2C1_AOP

I2C1_AOP_SCL	PP0590 P2MM-NSM	ROOM=TEST
I2C1_AOP_SDA	PP0591 P2MM-NSM	ROOM=TEST

CCG2

CCG2_TO_SMC_INT_L	PP0592 P2MM-NSM	ROOM=TEST

PAGE TITLE
SYSTEM: Testpoints (Top)

Apple Inc.

DRAWING NUMBER 051-02221 SIZE D
REVISION 9.0.0
BRANCH evt-1
PAGE 5 OF 80
SHEET 4 OF 51

NOTICE OF PROPRIETARY PROPERTY:
THE INFORMATION CONTAINED HEREIN IS THE PROPRIETARY PROPERTY OF APPLE INC.
THE POSESSOR AGREES TO THE FOLLOWING:
I TO MAINTAIN THIS DOCUMENT IN CONFIDENCE
II NOT TO REPRODUCE OR COPY IT
III NOT TO REVEAL OR PUBLISH IT IN WHOLE OR PART
IV ALL RIGHTS RESERVED

BOOTSTRAPPING:BOARD REV
BOARD ID
BOOT CONFIG

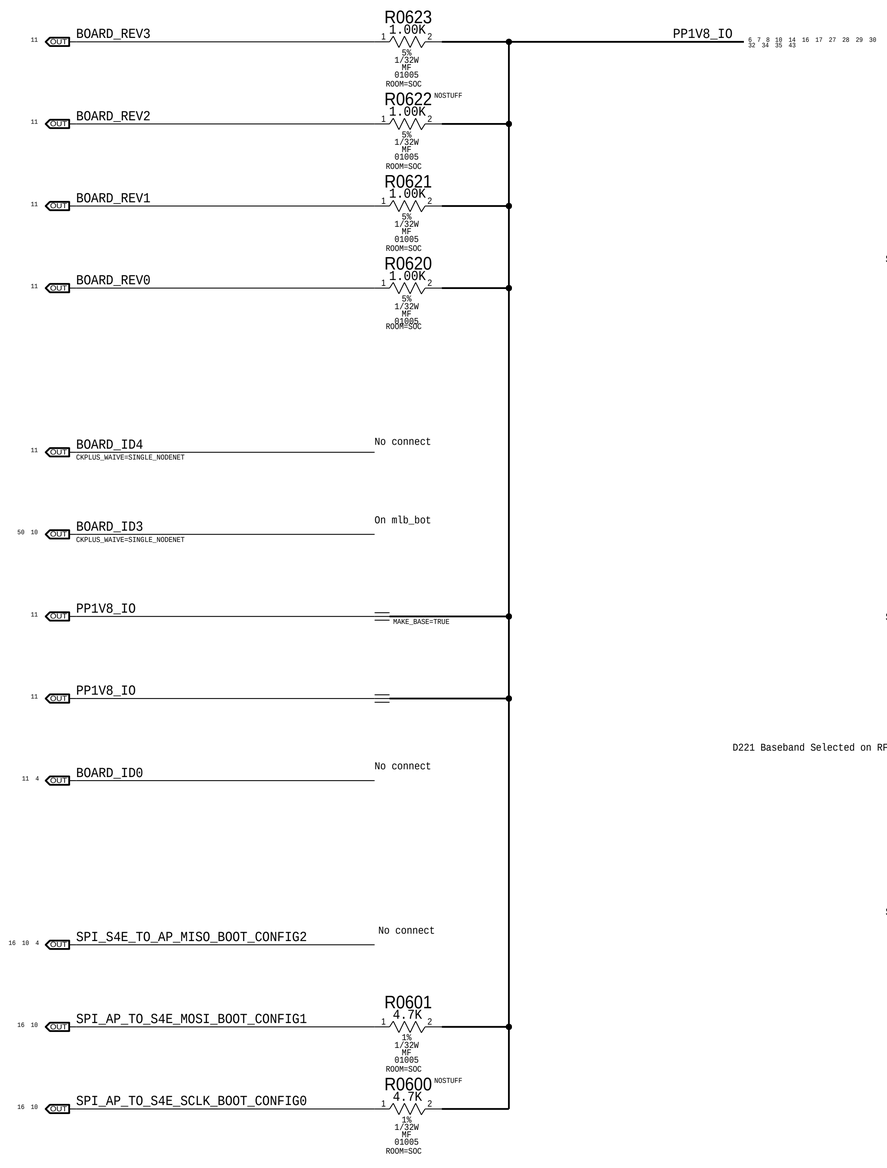

SELECTED -->

Board Rev[3:0] Float=Low I PU=High	3	2	1	0
	Build Major		Build Minor	
Proto 1	1	1	1	1
Proto 1 (DOE6)	1	1	1	0
Proto 2	1	1	0	1
Proto 3	1	1	0	0
EVT	1	0	1	1
(Spare)	1	0	1	0
Carrier	0	1	1	1
(Spare)	0	1	1	0
DVT	0	0	1	1
(Spare)	0	0	1	0
(Spare)	0	0	0	1
PVT	0	0	0	0

SELECTED -->

D221 Baseband Selected on RF Board

Board ID[4:0] Float=Low I PU=High	4	3	2	1	0
	X	Baseband	Form Factor		MLB/Dev
D20 MLB	0	0	0	1	0
D20 Dev	0	0	0	1	1
D21 MLB	0	0	1	0	0
D21 Dev	0	0	1	0	1
D22 MLB	0	0	1	1	0
D22 Dev	0	0	1	1	1
D201 MLB	0	1	0	1	0
D201 Dev	0	1	0	1	1
D211 MLB	0	1	1	0	0
D211 Dev	0	1	1	0	1
D221 MLB	0	1	1	1	0
D221 Dev	0	1	1	1	1

SELECTED -->

Boot Config[2:0] Float=Low I PU=High	2	1	0
SPI0	0	0	0
SPI0 Test Mode	0	0	1
SPI0 NAND	0	1	0
SPI0 NAND Test	0	1	1
Slow SPI0 Test	1	1	0

PAGE TITLE
BOOTSTRAPPING

Apple Inc.

DRAWING NUMBER 051-02221
SIZE D
REVISION 9.0.0
BRANCH evt-1
PAGE 6 OF 80
SHEET 5 OF 51

NOTICE OF PROPRIETARY PROPERTY:
THE INFORMATION CONTAINED HEREIN IS THE PROPRIETARY PROPERTY OF APPLE INC.
THE POSESSOR AGREES TO THE FOLLOWING:
I TO MAINTAIN THIS DOCUMENT IN CONFIDENCE
II NOT TO REPRODUCE OR COPY IT
III NOT TO REVEAL OR PUBLISH IT IN WHOLE OR PART
IV ALL RIGHTS RESERVED

SOC - USB, JTAG, XTAL

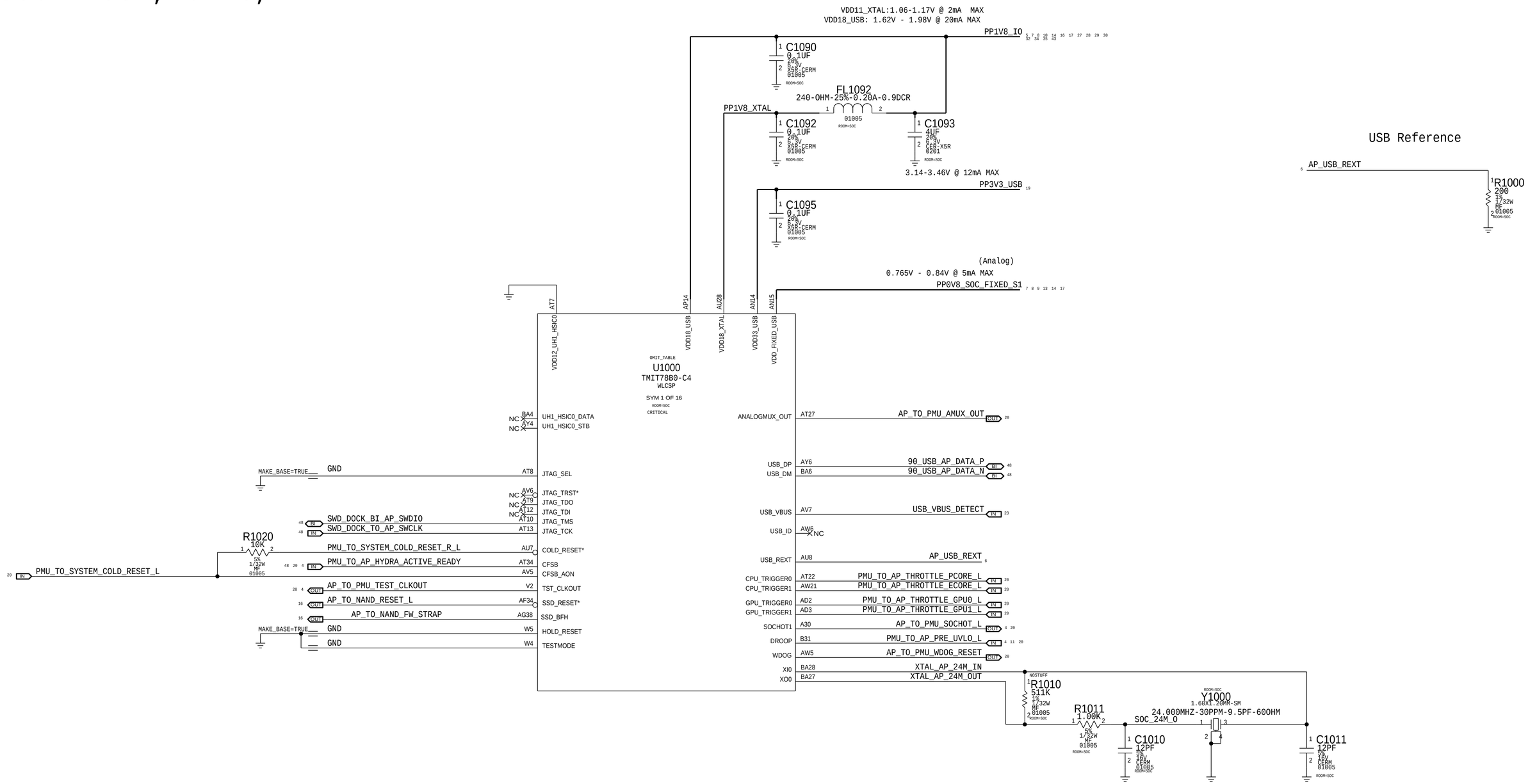

PAGE TITLE

SOC: JTAG,USB,XTAL

Apple Inc.

DRAWING NUMBER 051-02221 SIZE D

REVISION 9.0.0

BRANCH evt-1

PAGE 10 OF 80

SHEET 6 OF 51

NOTICE OF PROPRIETARY PROPERTY:

THE INFORMATION CONTAINED HEREIN IS THE PROPRIETARY PROPERTY OF APPLE INC.
THE POSESSOR AGREES TO THE FOLLOWING:

I TO MAINTAIN THIS DOCUMENT IN CONFIDENCE

II NOT TO REPRODUCE OR COPY IT

III NOT TO REVEAL OR PUBLISH IT IN WHOLE OR PART

IV ALL RIGHTS RESERVED

SOC - PCIE INTERFACES

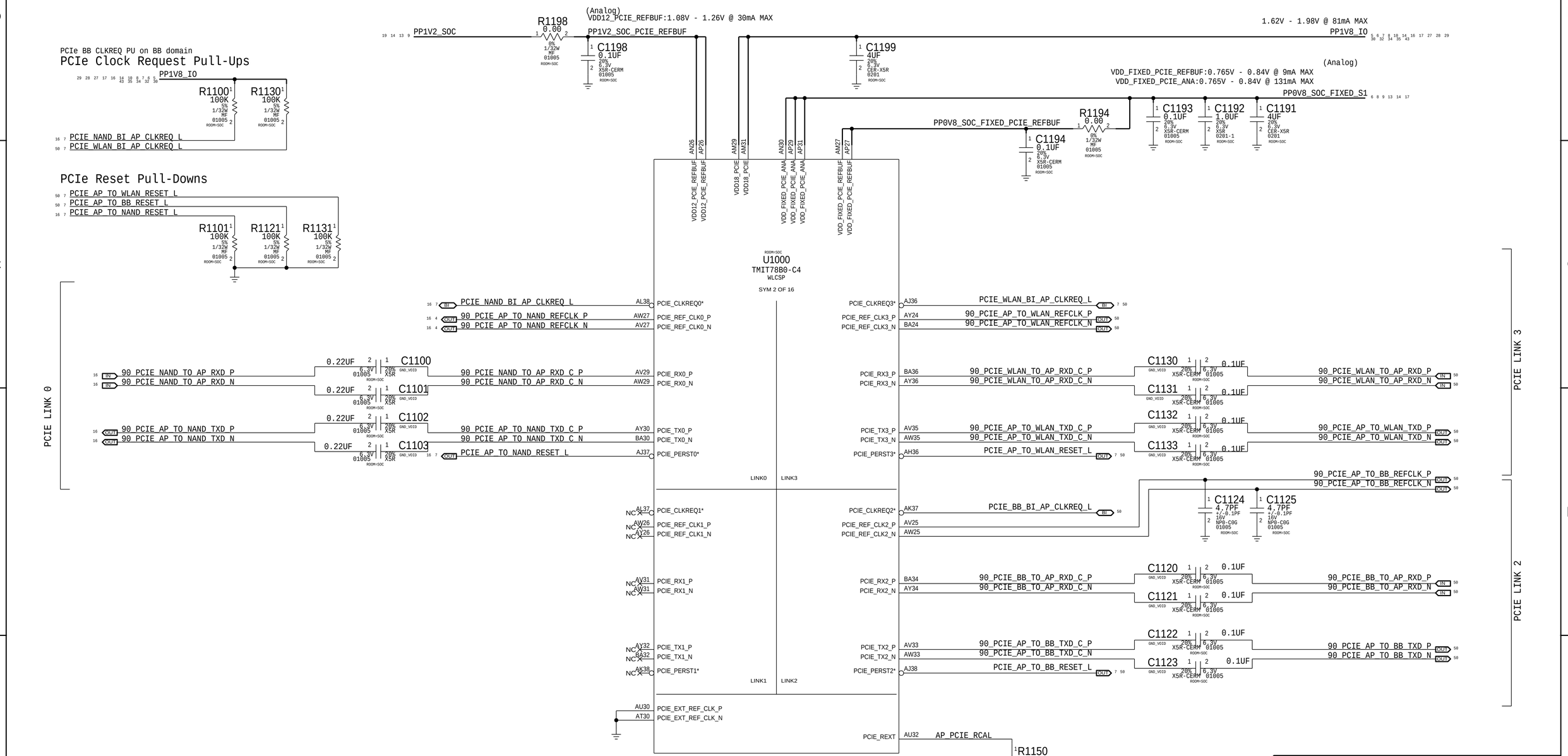

PAGE TITLE	SOC: PCIE
Apple Inc.	DRAWING NUMBER 051-02221 SIZE D
	REVISION 9.0.0
NOTICE OF PROPRIETARY PROPERTY: THE INFORMATION CONTAINED HEREIN IS THE PROPRIETARY PROPERTY OF APPLE INC. THE POSESSOR AGREES TO THE FOLLOWING: I TO MAINTAIN THIS DOCUMENT IN CONFIDENCE II NOT TO REPRODUCE OR COPY IT III NOT TO REVEAL OR PUBLISH IT IN WHOLE OR PART IV ALL RIGHTS RESERVED	BRANCH evt-1
	PAGE 11 OF 80
	SHEET 7 OF 51

SOC - MIPI & ISP INTERFACES

MIPI Lane & Polarity Swapping

Program	Function	SOC LANE	DISTAL LANE	Lane Swap	Polarity Swap
X891	Display	Clock_P	Clock_N		✓
		Clock_N	Clock_P		✓
		Lane_0_P	Lane_0_N		
		Lane_0_N	Lane_0_P		
		Lane_1_P	Lane_1_P		
		Lane_1_N	Lane_1_N		
		Lane_2_P	Lane_3_N	✓	
		Lane_2_N	Lane_3_N	✓	✓
		Lane_3_N	Lane_2_P	✓	✓
	FCAM	Clock_P	Clock_P		
		Clock_N	Clock_N		
		Lane_0_P	Lane_0_N		✓
		Lane_0_N	Lane_0_P		✓
		Lane_1_P	Lane_1_N		✓
		Lane_1_N	Lane_1_P		✓
	JULIET	Clock_P	Clock_N		✓
		Clock_N	Clock_P		✓
		Lane_0_P	Lane_0_P		
		Lane_0_N	Lane_0_N		
		Lane_1_P	Lane_1_P		
		Lane_1_N	Lane_1_N		

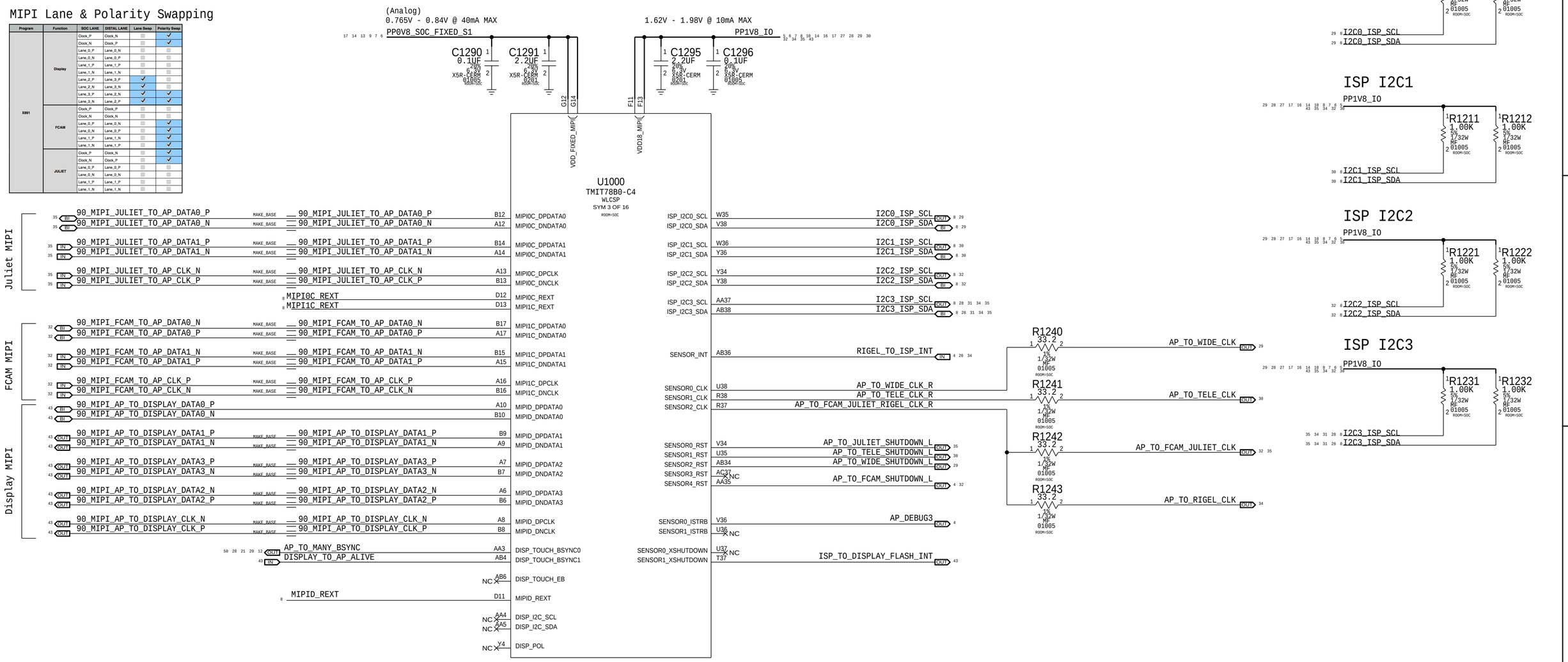

MIPI Reference

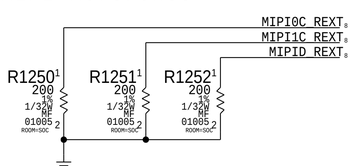

PAGE TITLE
SOC: MIPI & ISP

Apple Inc.

DRAWING NUMBER 051-02221
SIZE D
REVISION 9.0.0
BRANCH evt-1
PAGE 12 OF 80
SHEET 8 OF 51

NOTICE OF PROPRIETARY PROPERTY:
THE INFORMATION CONTAINED HEREIN IS THE PROPRIETARY PROPERTY OF APPLE INC.
THE POSESSOR AGREES TO THE FOLLOWING:
I TO MAINTAIN THIS DOCUMENT IN CONFIDENCE
II NOT TO REPRODUCE OR COPY IT
III NOT TO REVEAL OR PUBLISH IT IN WHOLE OR PART
IV ALL RIGHTS RESERVED

SOC - LPDP

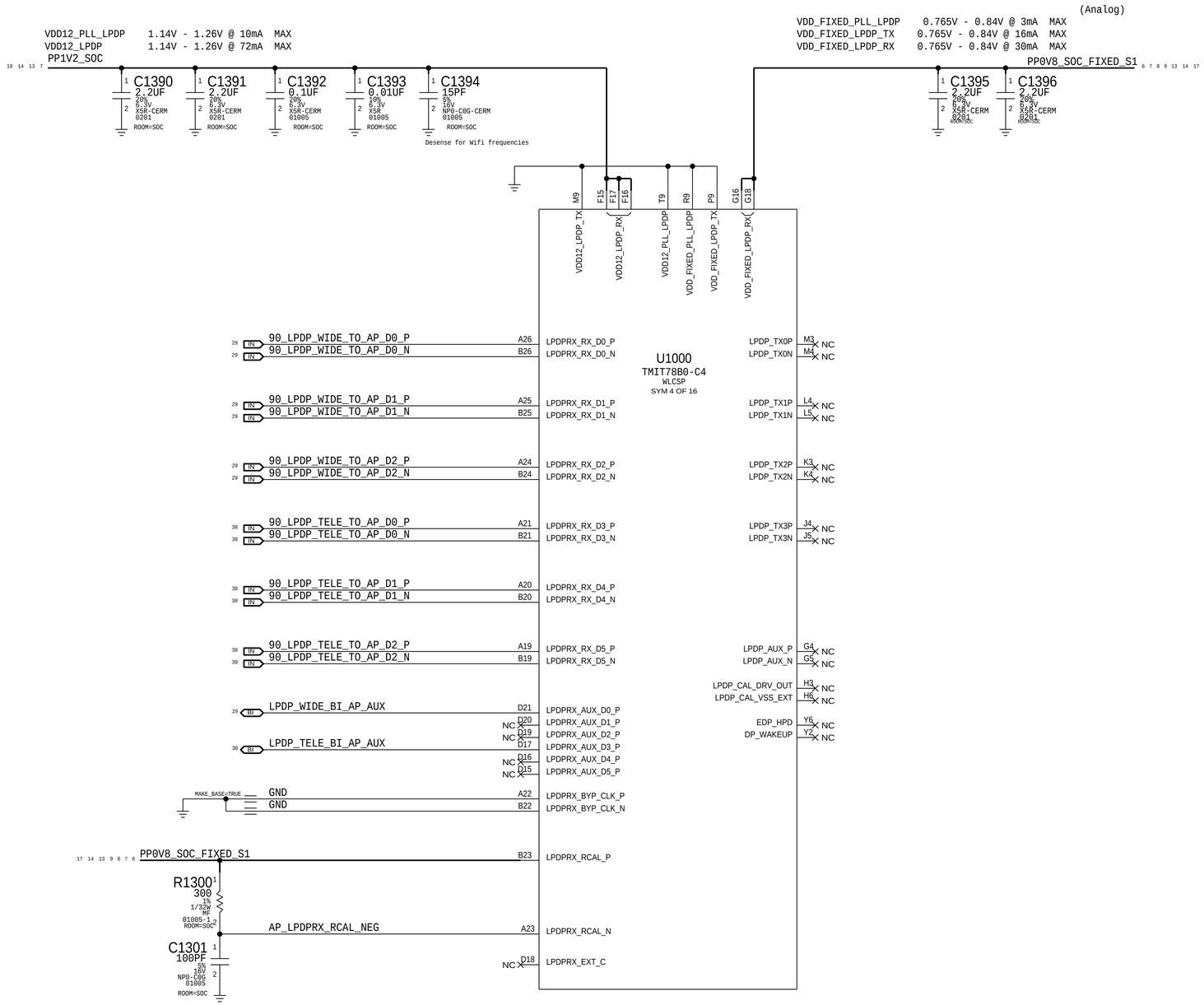

PAGE TITLE

SOC: LPDP

Apple Inc.

DRAWING NUMBER 051-02221 SIZE D

REVISION 9.0.0

BRANCH evt-1

PAGE 13 OF 80

SHEET 9 OF 51

NOTICE OF PROPRIETARY PROPERTY:
THE INFORMATION CONTAINED HEREIN IS THE PROPRIETARY PROPERTY OF APPLE INC.
THE POSESSOR AGREES TO THE FOLLOWING:
I TO MAINTAIN THIS DOCUMENT IN CONFIDENCE
II NOT TO REPRODUCE OR COPY IT
III NOT TO REVEAL OR PUBLISH IT IN WHOLE OR PART
IV ALL RIGHTS RESERVED

SOC - SERIAL INTERFACES

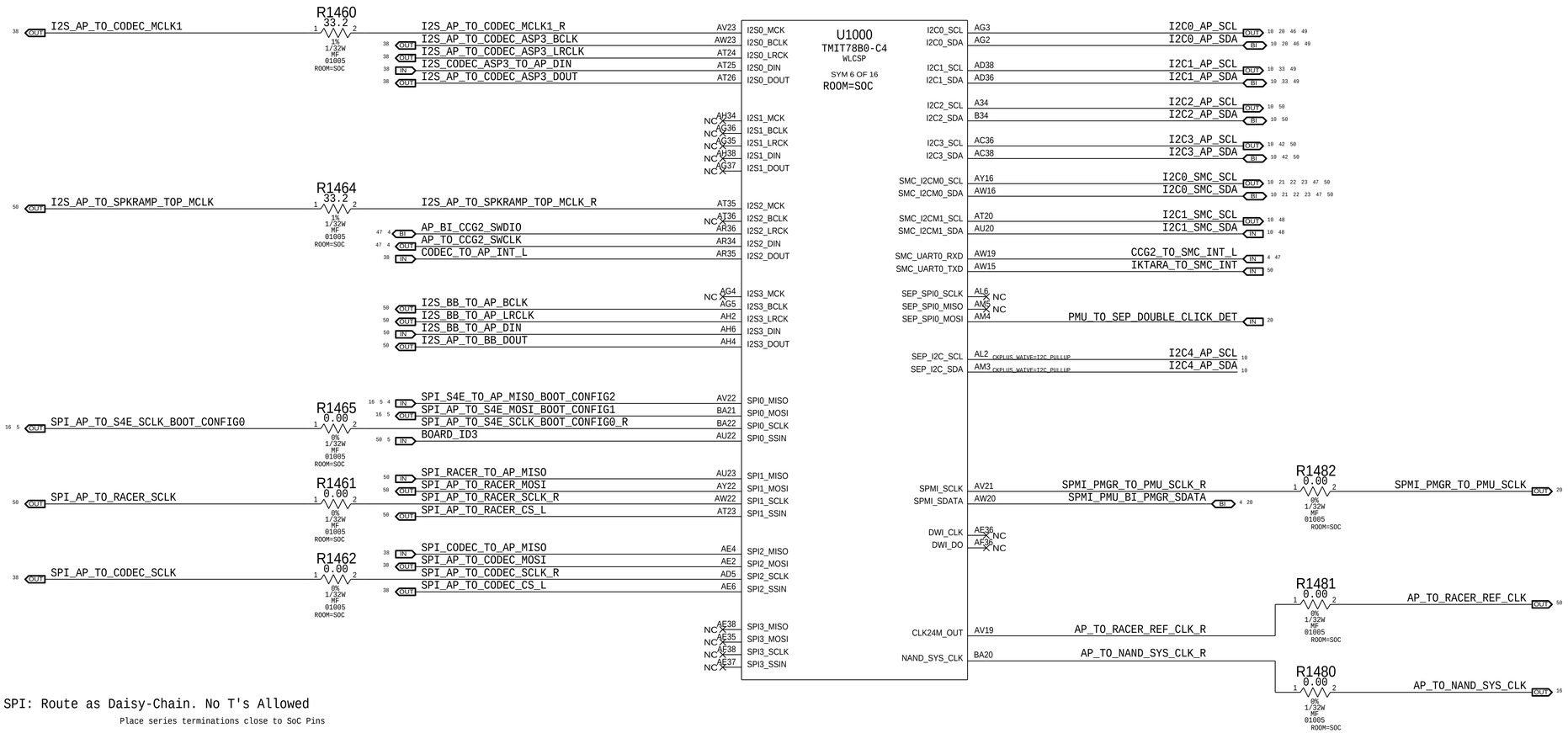

SPI: Route as Daisy-Chain. No T's Allowed

Place series terminations close to SoC Pins

AP I2C0

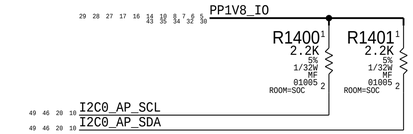

AP I2C1

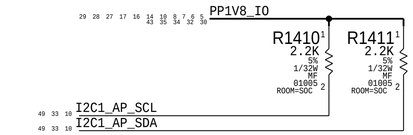

AP I2C2

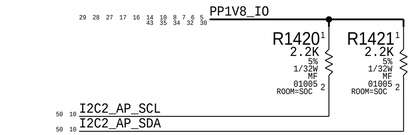

AP I2C3

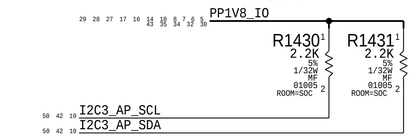

SMC I2C

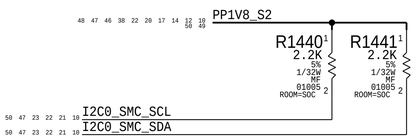

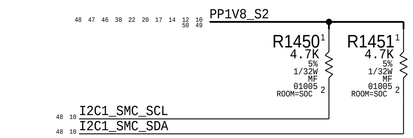

AP I2C4

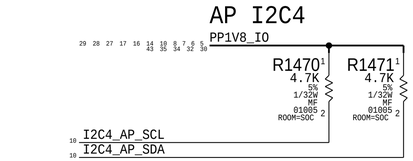

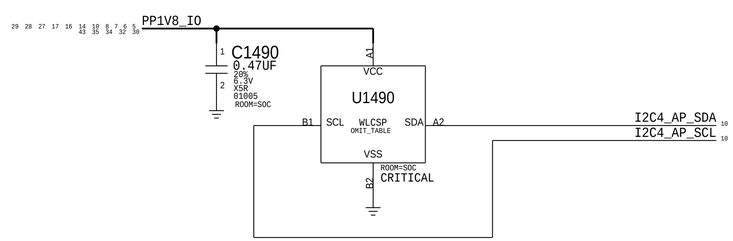

PART#	QTY	DESCRIPTION	REFERENCE DESIGNATOR(S)	CRITICAL	BOM OPTION
335S00234	1	WLCSP	U1490	CRITICAL	COMMON

PART NUMBER	ALTERNATE FOR PART NUMBER	BOM OPTION	REF DES	COMMENTS:
335S00233	335S00234	BOM_TABLE_ALTS	U1490	U1490

PAGE TITLE
SOC: Serial

Apple Inc.

DRAWING NUMBER 051-02221
SIZE D
REVISION 9.0.0
BRANCH evt-1
PAGE 14 OF 80
SHEET 10 OF 51

NOTICE OF PROPRIETARY PROPERTY:
THE INFORMATION CONTAINED HEREIN IS THE PROPRIETARY PROPERTY OF APPLE INC. THE POSESSOR AGREES TO THE FOLLOWING:
I TO MAINTAIN THIS DOCUMENT IN CONFIDENCE
II NOT TO REPRODUCE OR COPY IT
III NOT TO REVEAL OR PUBLISH IT IN WHOLE OR PART
IV ALL RIGHTS RESERVED

SOC - GPIO INTERFACES

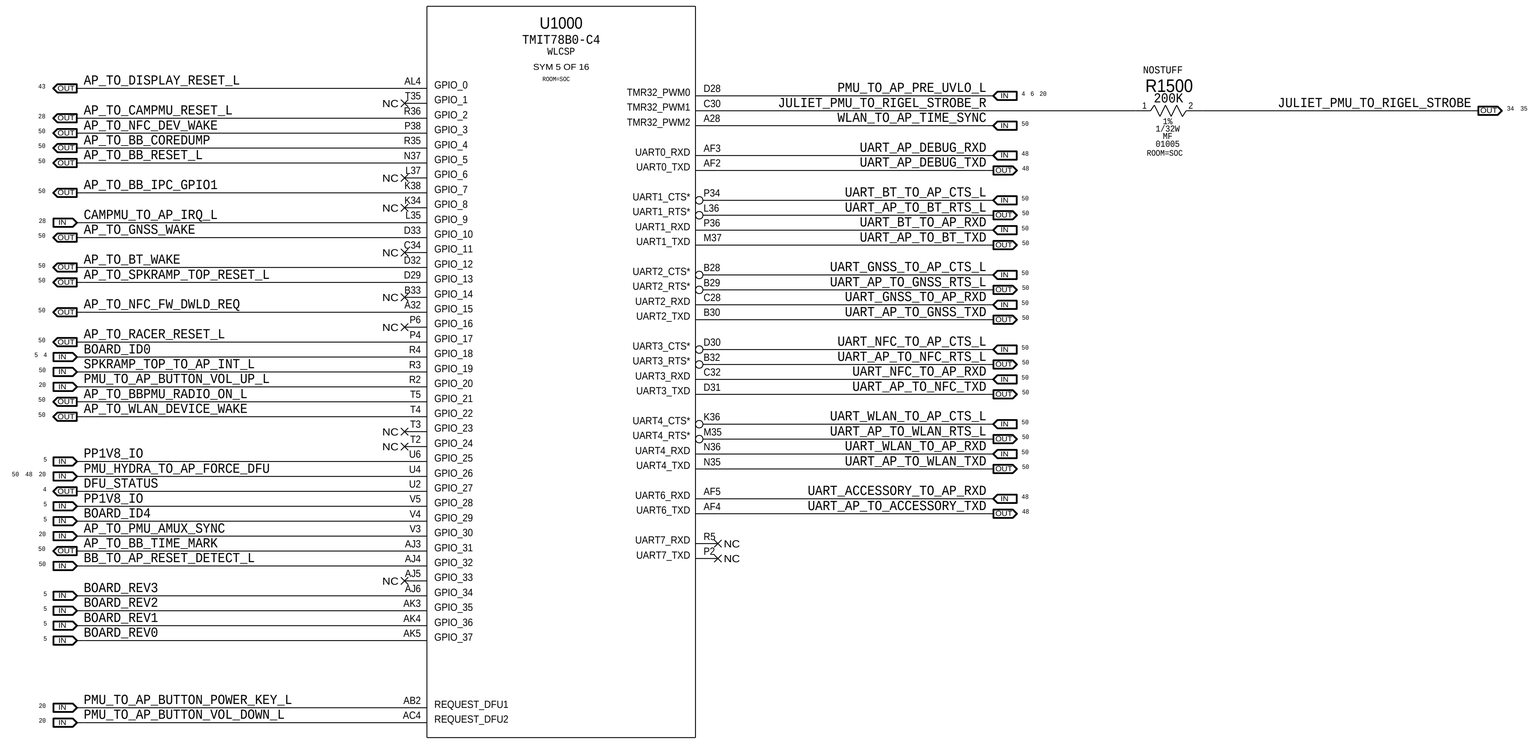

PAGE TITLE

SOC: GPIO & UART

Apple Inc.

DRAWING NUMBER 051-02221

SIZE D

REVISION 9.0.0

BRANCH evt-1

PAGE 15 OF 80

SHEET 11 OF 51

NOTICE OF PROPRIETARY PROPERTY:

THE INFORMATION CONTAINED HEREIN IS THE PROPRIETARY PROPERTY OF APPLE INC.
THE POSESSOR AGREES TO THE FOLLOWING:

I TO MAINTAIN THIS DOCUMENT IN CONFIDENCE

II NOT TO REPRODUCE OR COPY IT

III NOT TO REVEAL OR PUBLISH IT IN WHOLE OR PART

IV ALL RIGHTS RESERVED

SOC - AOP

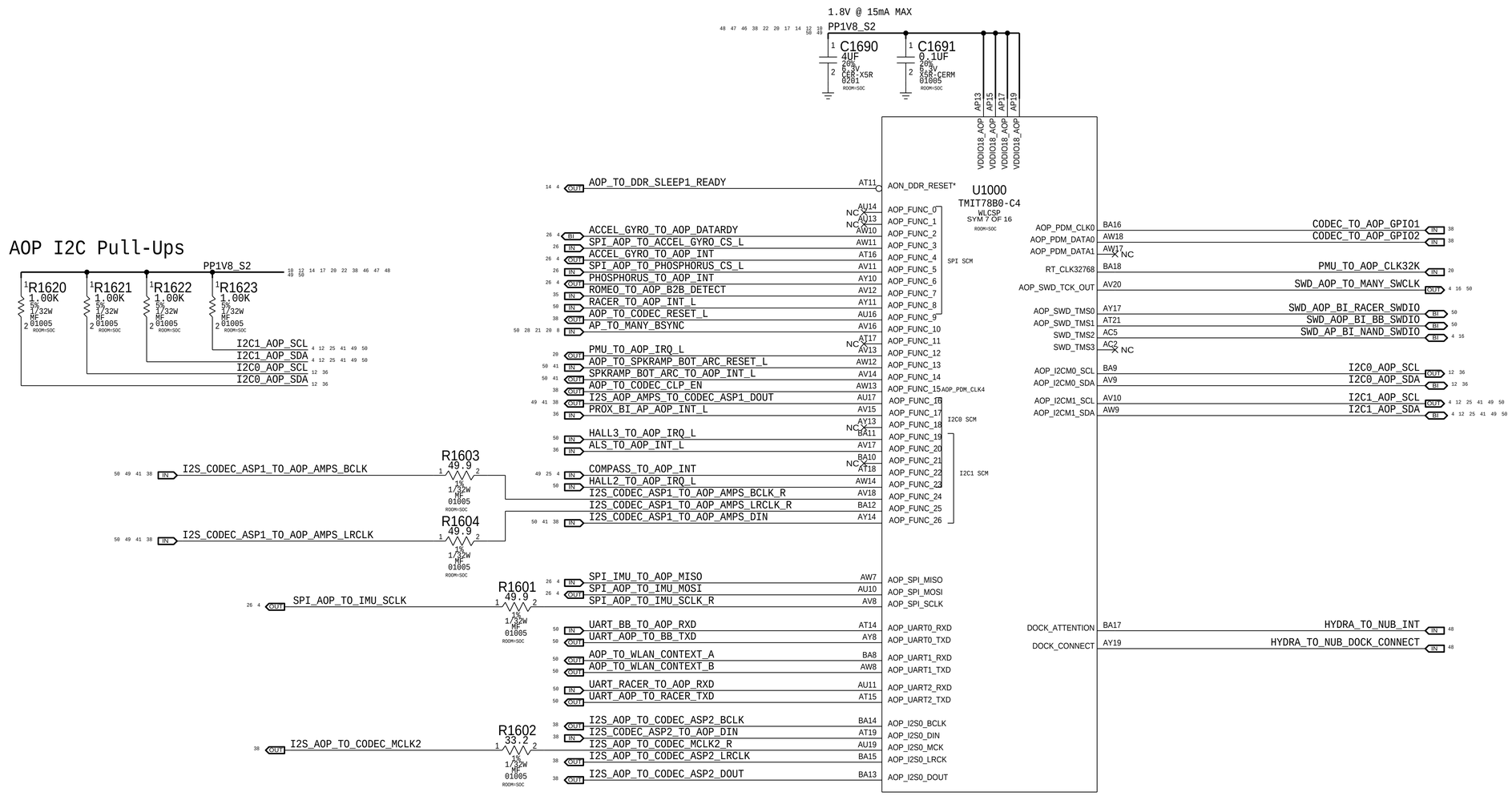

PAGE TITLE	SOC: AOP
Apple Inc.	DRAWING NUMBER 051-02221 SIZE D
	REVISION 9.0.0
	BRANCH evt-1
	PAGE 16 OF 80
	SHEET 12 OF 51

NOTICE OF PROPRIETARY PROPERTY:
THE INFORMATION CONTAINED HEREIN IS THE PROPRIETARY PROPERTY OF APPLE INC.
THE POSESSOR AGREES TO THE FOLLOWING:
I TO MAINTAIN THIS DOCUMENT IN CONFIDENCE
II NOT TO REPRODUCE OR COPY IT
III NOT TO REVEAL OR PUBLISH IT IN WHOLE OR PART
IV ALL RIGHTS RESERVED

SOC - CPU, GPU & SOC RAILS

1.06V @ 11.0A MAX
0.8V @ 6A MAX
0.575V @ 2.7A MAX

PP_CPU_PCORE

C1702 4UF 20% 4V X5R 0201 ROOM=SOC
C1703 4UF 20% 4V X5R 0201 ROOM=SOC

OMIT XW1701 SHORT-20L-0.05MM-SM ROOM=SOC — BUCK0_FB

C1704 14UF 20% 4V X5R 0402-D2X-1
C1705 14UF 20% 4V X5R 0402-D2X-1
C1706 14UF 20% 4V X5R 0402-D2X-1
C1707 14UF 20% 4V X5R 0402-D2X-1
C1708 14UF 20% 4V X5R 0402-D2X-1
C1709 14UF 20% 4V X5R 0402-D2X-1
C1710 14UF 20% 4V X5R 0402-D2X-1
C1711 14UF 20% 4V X5R 0402-D2X-1
C1712 14UF 20% 4V X5R 0402-D2X-1
C1713 14UF 20% 4V X5R 0402-D2X-1

U1000 TMIT78B0-C4 WLCSP
SYM 8 OF 16
ROOM=SOC

VDD_CPU: AA14, AA16, AB11, AB13, AB15, AB17, AB19, AC20, AD15, AE14, AF20, AG9, AG15, AH10, AH12, AH14, AH16, AH18, AH20

VDD_GPU: F25, J16, F31, G20, G22, G24, G26, J28, H11, H15, H19, H23, H31, J12, J18, J22, J24, J26, J30, L16, K17, K29, L12, L18, L22, L28, M23, L24, N22, N24, N28

1.06V @ 18.3A MAX
0.8V @ 10.6A MAX
0.575V @ 3.4A MAX

PP_GPU

C1730 4UF 20% 4V X5R 0201 ROOM=SOC
C1731 4UF 20% 4V X5R 0201 ROOM=SOC

OMIT XW1731 SHORT-20L-0.05MM-SM ROOM=SOC NO_XNET_CONNECTION — BUCK1_FB

C1732 14UF 20% 4V X5R 0402-D2X-1
C1733 14UF 20% 4V X5R 0402-D2X-1
C1734 14UF 20% 4V X5R 0402-D2X-1
C1735 14UF 20% 4V X5R 0402-D2X-1
C1736 14UF 20% 4V X5R 0402-D2X-1
C1737 14UF 20% 4V X5R 0402-D2X-1
C1738 14UF 20% 4V X5R 0402-D2X-1
C1739 14UF 20% 4V X5R 0402-D2X-1

0.765V @ 4.9A MAX
0.635V @ 2.6A MAX

PP_SOC_S1

C1760 4UF 20% 4V X5R 0201 ROOM=SOC
C1761 4UF 20% 4V X5R 0201 ROOM=SOC

OMIT XW1760 SHORT-20L-0.05MM-SM ROOM=SOC NO_XNET_CONNECTION — BUCK2_FB

C1762 14UF 20% 4V X5R 0402-D2X-1
C1763 14UF 20% 4V X5R 0402-D2X-1
C1764 14UF 20% 4V X5R 0402-D2X-1

U1000 TMIT78B0-C4 WLCSP
SYM 9 OF 16
ROOM=SOC

VDD_SOC: AA9, AA18, AA22, AA24, AA28, AA30, AB21, AB25, AB27, AC22, AC24, AC28, AC30, AD9, AD21, AD25, AD27, AD29, AE22, AE24, AE28, AF25, AF27, AG22, AG24, AG28, AH25, AH27, AJ16, AJ18, AJ22, AJ24, AJ28, AK13, AK15, AK19, AK21, AK25, AK27, AL12, AL16, AL18, AL22, AL24, AL28, AL30, AM13, AM25, AN12, AN22, AN24, F22

G13, J20, L19, M13, M15, M21, N10, N12, N16, N18, N29, P13, P15, P19, P21, P25, P27, R10, R12, R16, R18, R22, R24, R28, T13, T15, T19, T21, T25, T27, U16, U18, U22, U24, U28, U30, V19, V21, V25, V27, W18, W22, W24, W28, W30, Y19, Y25, Y21, Y27

VDD_SOC_SENSE: P23 — TP_SOC_SENSE

0.7V @ 75mA MAX
PP0V7_VDD_LOW_S2

C1750 4UF 20% 6.3V CER-X5R 0201 ROOM=SOC

VDD_LOW: AM15, AM17, AM19, AM21, AN16, AN18, AN20

1.01V @ 2.1A MAX
0.735V @ 0.6A MAX

PP_CPU_SRAM

C1772 14UF 20% 4V X5R 0402-D2X-1
C1773 14UF 20% 4V X5R 0402-D2X-1

VDD_CPU_SRAM: AA12, AB18, AC9, AC14, AE20, AF14, U14

1.06V @ 1.1A MAX
0.80V @ 0.63A MAX
0.675V @ 0.19A MAX

AP_CPU_PCORE_SENSE — AH21 — VDD_CPU_SENSE

PP_GPU_SRAM

C1781 14UF 20% 4V X5R 0402-D2X-1
C1782 14UF 20% 4V X5R 0402-D2X-1

VDD_GPU_SRAM: N26, H13, H17, H21, H25, K11, K19, K23, G30, M29

AP_VDD_GPU_SENSE — N23 — VDD_GPU_SENSE

VDD_ECPU: AA10, U10, U12, V13, V15, Y13, Y15

OMIT XW1790 SHORT-20L-0.05MM-SM ROOM=SOC — BUCK11_FB

1.06V @ 4.3A MAX
0.8V @ 2.8A MAX
0.575V @ 1.4A MAX

PP_CPU_ECORE

C1791 14UF 20% 4V X5R 0402-D2X-1
C1792 14UF 20% 4V X5R 0402-D2X-1
C1793 14UF 20% 4V X5R 0402-D2X-1
C1794 4UF 20% 4V X5R 0201 ROOM=SOC

(Analog)
0.8V @ 6mA MAX
0.8V @ 6mA MAX
0.8V @ 10mA MAX

PP0V8_SOC_FIXED_S1

VDD_FIXED_CPU: W14
VDD_FIXED_PLL_GPU: K21
VDD_FIXED_PLL_SOC: L20

(Analog)
1.2V @ 7mA MAX (CPU)
1.2V @ 7mA MAX (GPU)
1.2V @ 20mA MAX (SOC)

PP1V2_SOC

VDD12_PLL_CPU: W16
VDD12_PLL_GPU: L21
VDD12_PLL_SOC: M20

C1720 0.1UF 20% 6.3V X5R-CERM 01005 ROOM=SOC
C1721 0.1UF 20% 6.3V X5R-CERM 01005 ROOM=SOC
C1722 0.1UF 20% 6.3V X5R-CERM 01005 ROOM=SOC
C1723 4UF 20% 6.3V CER-X5R 0201 ROOM=SOC

PAGE TITLE	SOC: Power (1/3)
Apple Inc.	DRAWING NUMBER 051-02221 — SIZE D
	REVISION 9.0.0
	BRANCH evt-1
	PAGE 17 OF 80
	SHEET 13 OF 51

NOTICE OF PROPRIETARY PROPERTY:
THE INFORMATION CONTAINED HEREIN IS THE PROPRIETARY PROPERTY OF APPLE INC.
THE POSESSOR AGREES TO THE FOLLOWING:
I TO MAINTAIN THIS DOCUMENT IN CONFIDENCE
II NOT TO REPRODUCE OR COPY IT
III NOT TO REVEAL OR PUBLISH IT IN WHOLE OR PART
IV ALL RIGHTS RESERVED

SOC - POWER SUPPLIES

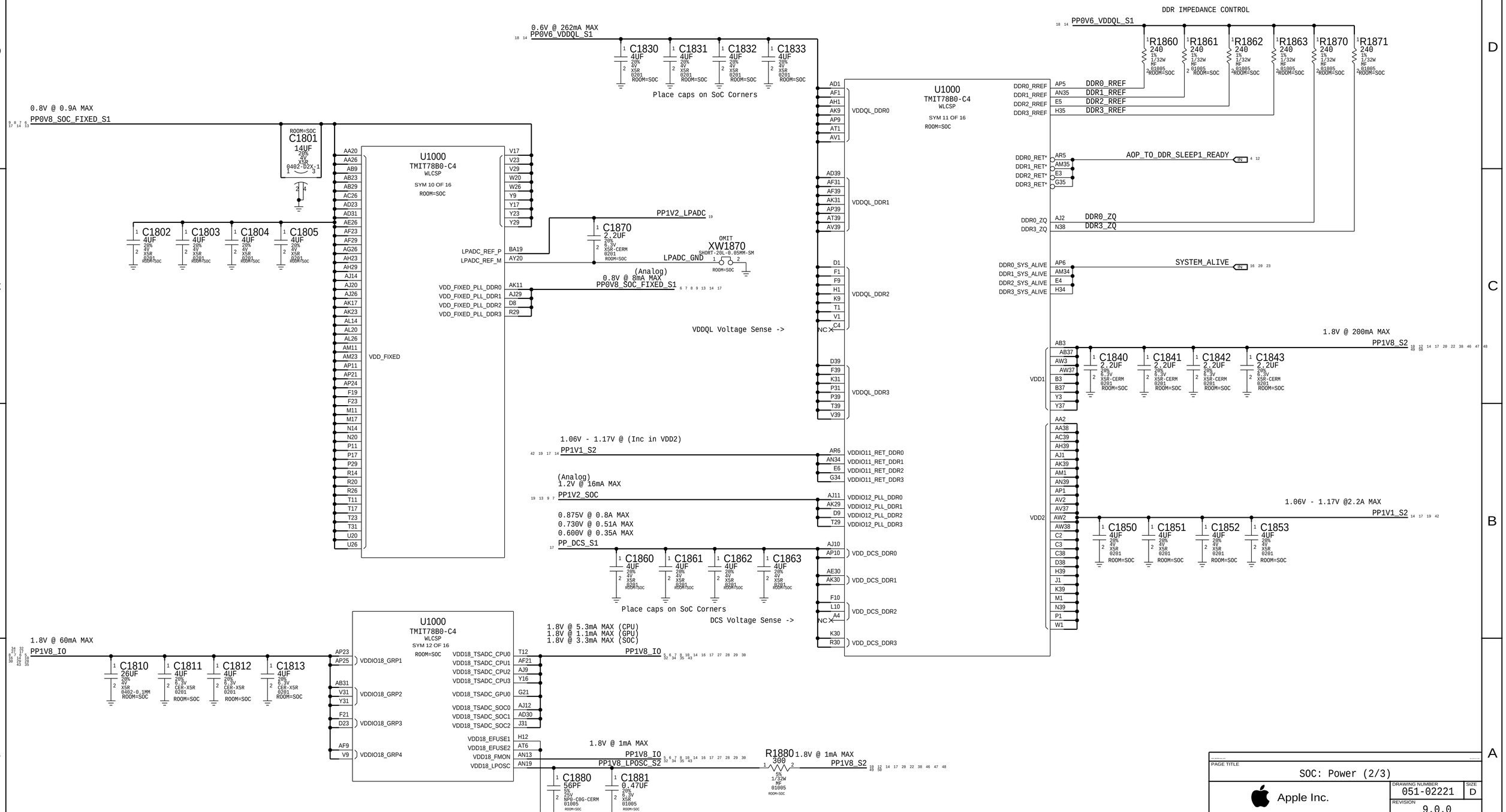

PAGE TITLE
SOC: Power (2/3)

Apple Inc.

DRAWING NUMBER 051-02221 SIZE D
REVISION 9.0.0
BRANCH evt-1
PAGE 18 OF 80
SHEET 14 OF 51

NOTICE OF PROPRIETARY PROPERTY:
THE INFORMATION CONTAINED HEREIN IS THE PROPRIETARY PROPERTY OF APPLE INC.
THE POSESSOR AGREES TO THE FOLLOWING:
I TO MAINTAIN THIS DOCUMENT IN CONFIDENCE
II NOT TO REPRODUCE OR COPY IT
III NOT TO REVEAL OR PUBLISH IT IN WHOLE OR PART
IV ALL RIGHTS RESERVED

SOC - POWER SUPPLIES

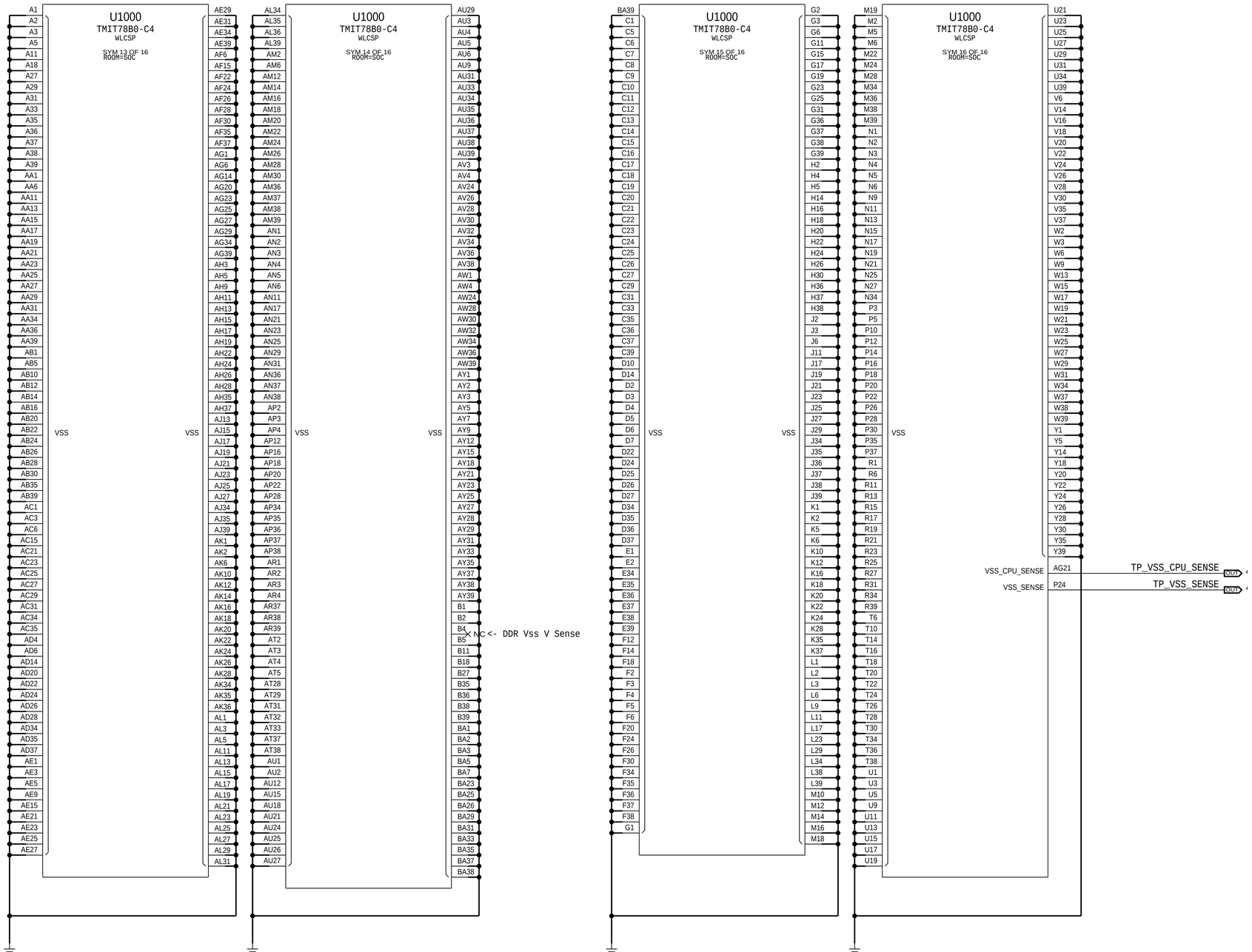

PAGE TITLE

SOC: Power (3/3)

Apple Inc.

DRAWING NUMBER 051-02221

SIZE D

REVISION 9.0.0

BRANCH evt-1

PAGE 19 OF 80

SHEET 15 OF 51

NOTICE OF PROPRIETARY PROPERTY:

THE INFORMATION CONTAINED HEREIN IS THE PROPRIETARY PROPERTY OF APPLE INC.
THE POSESSOR AGREES TO THE FOLLOWING:
I TO MAINTAIN THIS DOCUMENT IN CONFIDENCE
II NOT TO REPRODUCE OR COPY IT
III NOT TO REVEAL OR PUBLISH IT IN WHOLE OR PART
IV ALL RIGHTS RESERVED

S4E NAND

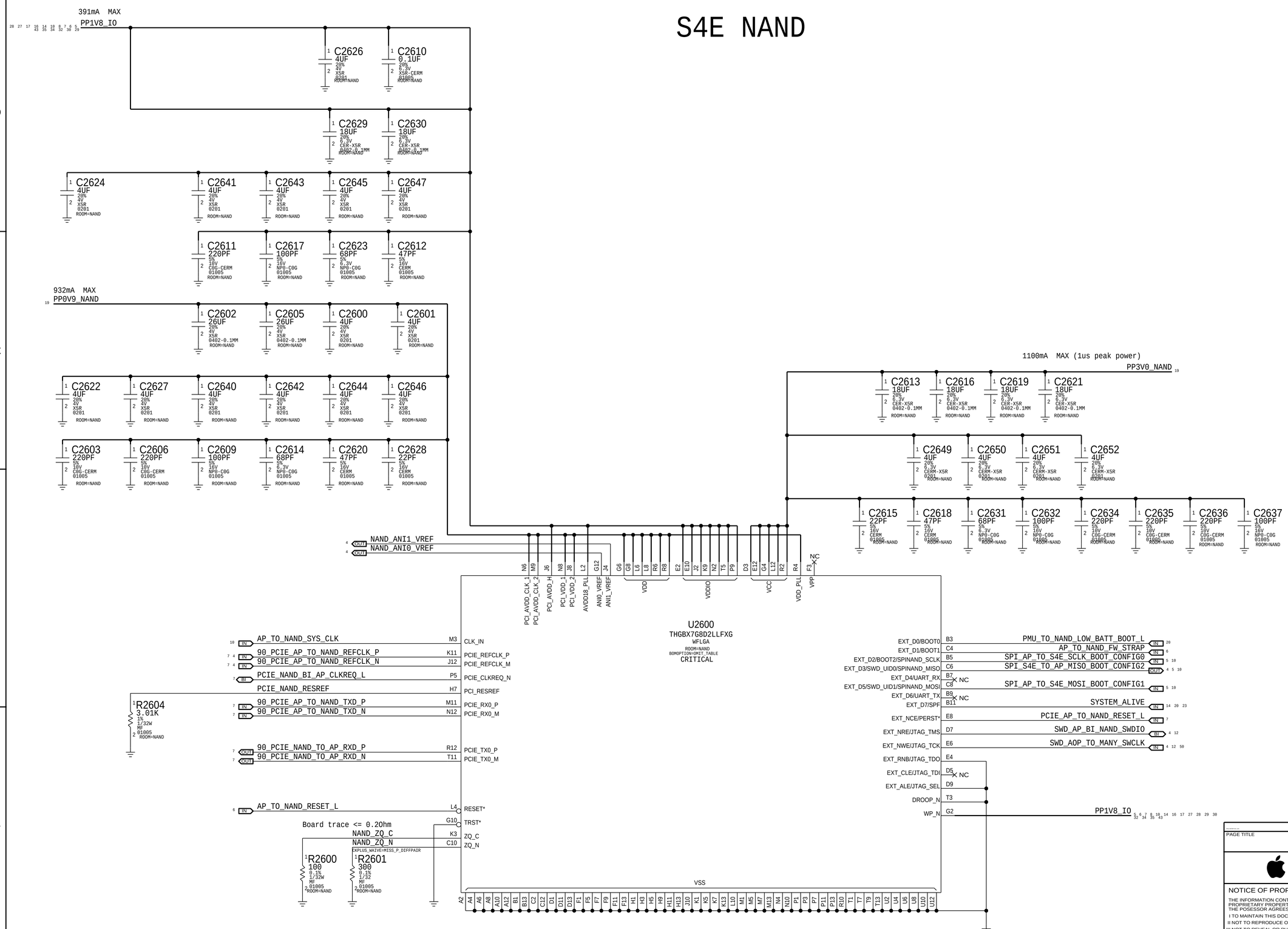

PAGE TITLE

NAND

Apple Inc.

DRAWING NUMBER	051-02221
SIZE	D
REVISION	9.0.0
BRANCH	evt-1
PAGE	26 OF 80
SHEET	16 OF 51

NOTICE OF PROPRIETARY PROPERTY:

THE INFORMATION CONTAINED HEREIN IS THE PROPRIETARY PROPERTY OF APPLE INC.
THE POSESSOR AGREES TO THE FOLLOWING:

I TO MAINTAIN THIS DOCUMENT IN CONFIDENCE

II NOT TO REPRODUCE OR COPY IT

III NOT TO REVEAL OR PUBLISH IT IN WHOLE OR PART

IV ALL RIGHTS RESERVED

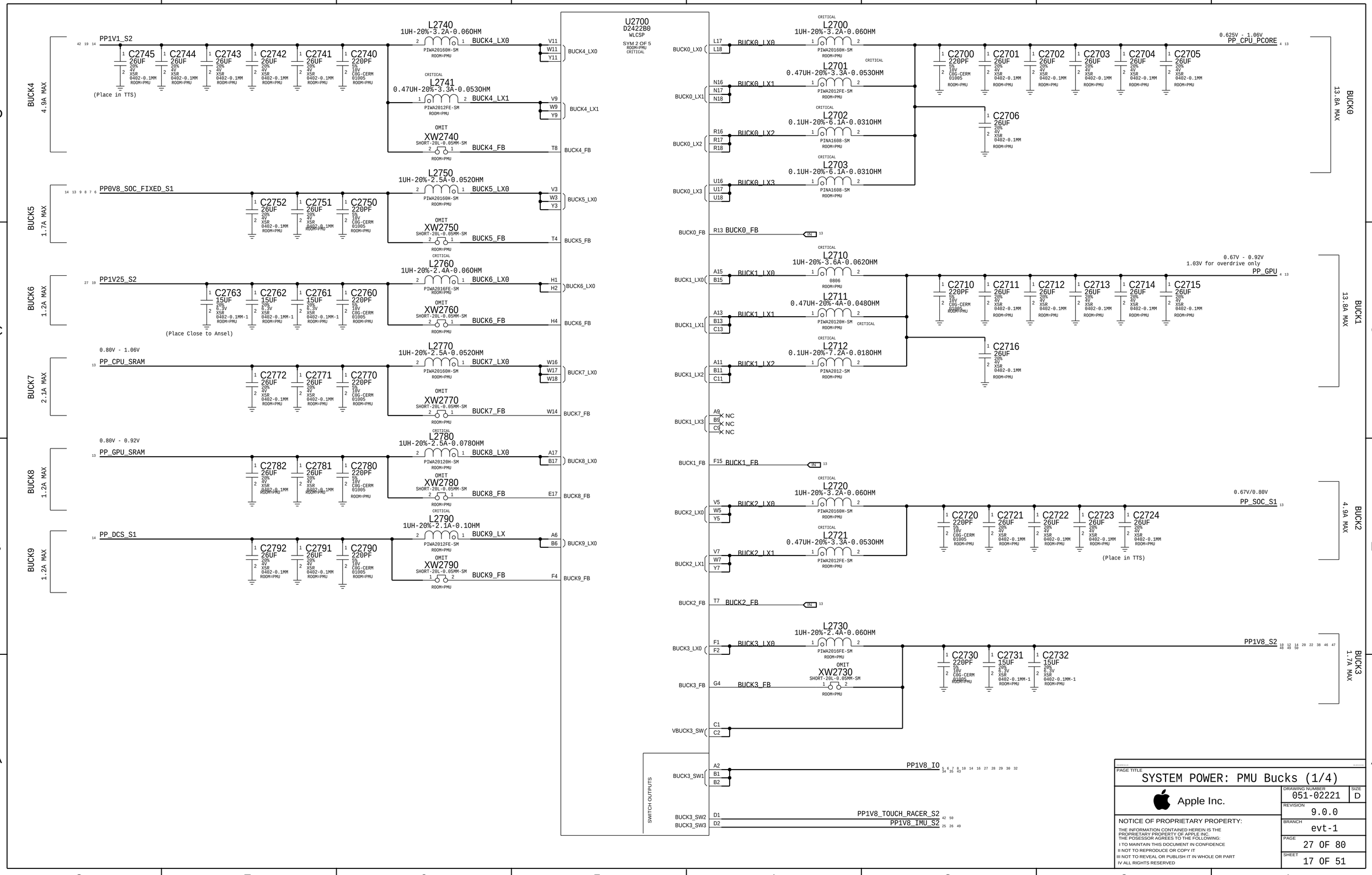
U2700
D2422B0
WLCSP
SYM 2 OF 5
ROOM=PMU
CRITICAL
BUCK4
4.9A MAX
PP1V1_S2
(Place in TTS)
C2745 26UF
C2744 26UF
C2743 26UF
C2742 26UF
C2741 26UF
C2740 220PF
L2740
1UH-20%-3.2A-0.06OHM
PIWA20160H-SM
BUCK4_LX0
L2741
0.47UH-20%-3.3A-0.053OHM
PIWA2012FE-SM
BUCK4_LX1
OMIT
XW2740
SHORT-20L-0.05MM-SM
BUCK4_FB
BUCK5
1.7A MAX
PP0V8_SOC_FIXED_S1
C2752 26UF
C2751 26UF
C2750 220PF
L2750
1UH-20%-2.5A-0.052OHM
PIWA20160H-SM
BUCK5_LX0
XW2750
SHORT-20L-0.05MM-SM
BUCK5_FB
BUCK6
1.2A MAX
PP1V25_S2
C2763 15UF
C2762 15UF
C2761 15UF
C2760 220PF
(Place Close to Ansel)
L2760
1UH-20%-2.4A-0.06OHM
PIWA2016FE-SM
BUCK6_LX0
XW2760
SHORT-20L-0.05MM-SM
BUCK6_FB
BUCK7
2.1A MAX
0.80V - 1.06V
PP_CPU_SRAM
C2772 26UF
C2771 26UF
C2770 220PF
L2770
1UH-20%-2.5A-0.052OHM
PIWA20160H-SM
BUCK7_LX0
XW2770
SHORT-20L-0.05MM-SM
BUCK7_FB
BUCK8
1.2A MAX
0.80V - 0.92V
PP_GPU_SRAM
C2782 26UF
C2781 26UF
C2780 220PF
L2780
1UH-20%-2.5A-0.078OHM
PIWA20120H-SM
BUCK8_LX0
XW2780
SHORT-20L-0.05MM-SM
BUCK8_FB
BUCK9
1.2A MAX
PP_DCS_S1
C2792 26UF
C2791 26UF
C2790 220PF
L2790
1UH-20%-2.1A-0.10HM
PIWA2012FE-SM
BUCK9_LX
XW2790
SHORT-20L-0.05MM-SM
BUCK9_FB
BUCK0
13.8A MAX
0.625V - 1.06V
PP_CPU_PCORE
L2700
1UH-20%-3.2A-0.06OHM
PIWA20160H-SM
L2701
0.47UH-20%-3.3A-0.053OHM
PIWA2012FE-SM
L2702
0.1UH-20%-6.1A-0.031OHM
PINA1608-SM
L2703
0.1UH-20%-6.1A-0.031OHM
PINA1608-SM
C2700 220PF
C2701 26UF
C2702 26UF
C2703 26UF
C2704 26UF
C2705 26UF
C2706 26UF
BUCK0_FB
BUCK1
13.8A MAX
0.67V - 0.92V
1.03V for overdrive only
PP_GPU
L2710
1UH-20%-3.6A-0.062OHM
0806
L2711
0.47UH-20%-4A-0.048OHM
PIWA20120H-SM
L2712
0.1UH-20%-7.2A-0.018OHM
PINA2012-SM
C2710 220PF
C2711 26UF
C2712 26UF
C2713 26UF
C2714 26UF
C2715 26UF
C2716 26UF
BUCK1_FB
BUCK2
4.9A MAX
0.67V/0.80V
PP_SOC_S1
L2720
1UH-20%-3.2A-0.06OHM
PIWA20160H-SM
L2721
0.47UH-20%-3.3A-0.053OHM
PIWA2012FE-SM
C2720 220PF
C2721 26UF
C2722 26UF
C2723 26UF
C2724 26UF
(Place in TTS)
BUCK2_FB
BUCK3
1.7A MAX
PP1V8_S2
L2730
1UH-20%-2.4A-0.06OHM
PIWA2016FE-SM
XW2730
SHORT-20L-0.05MM-SM
C2730 220PF
C2731 15UF
C2732 15UF
VBUCK3_SW
SWITCH OUTPUTS
PP1V8_IO
PP1V8_TOUCH_RACER_S2
PP1V8_IMU_S2
PAGE TITLE
SYSTEM POWER: PMU Bucks (1/4)
Apple Inc.
DRAWING NUMBER
051-02221
SIZE
D
REVISION
9.0.0
BRANCH
evt-1
PAGE
27 OF 80
SHEET
17 OF 51
NOTICE OF PROPRIETARY PROPERTY:
THE INFORMATION CONTAINED HEREIN IS THE PROPRIETARY PROPERTY OF APPLE INC.
THE POSESSOR AGREES TO THE FOLLOWING:
I TO MAINTAIN THIS DOCUMENT IN CONFIDENCE
II NOT TO REPRODUCE OR COPY IT
III NOT TO REVEAL OR PUBLISH IT IN WHOLE OR PART
IV ALL RIGHTS RESERVED

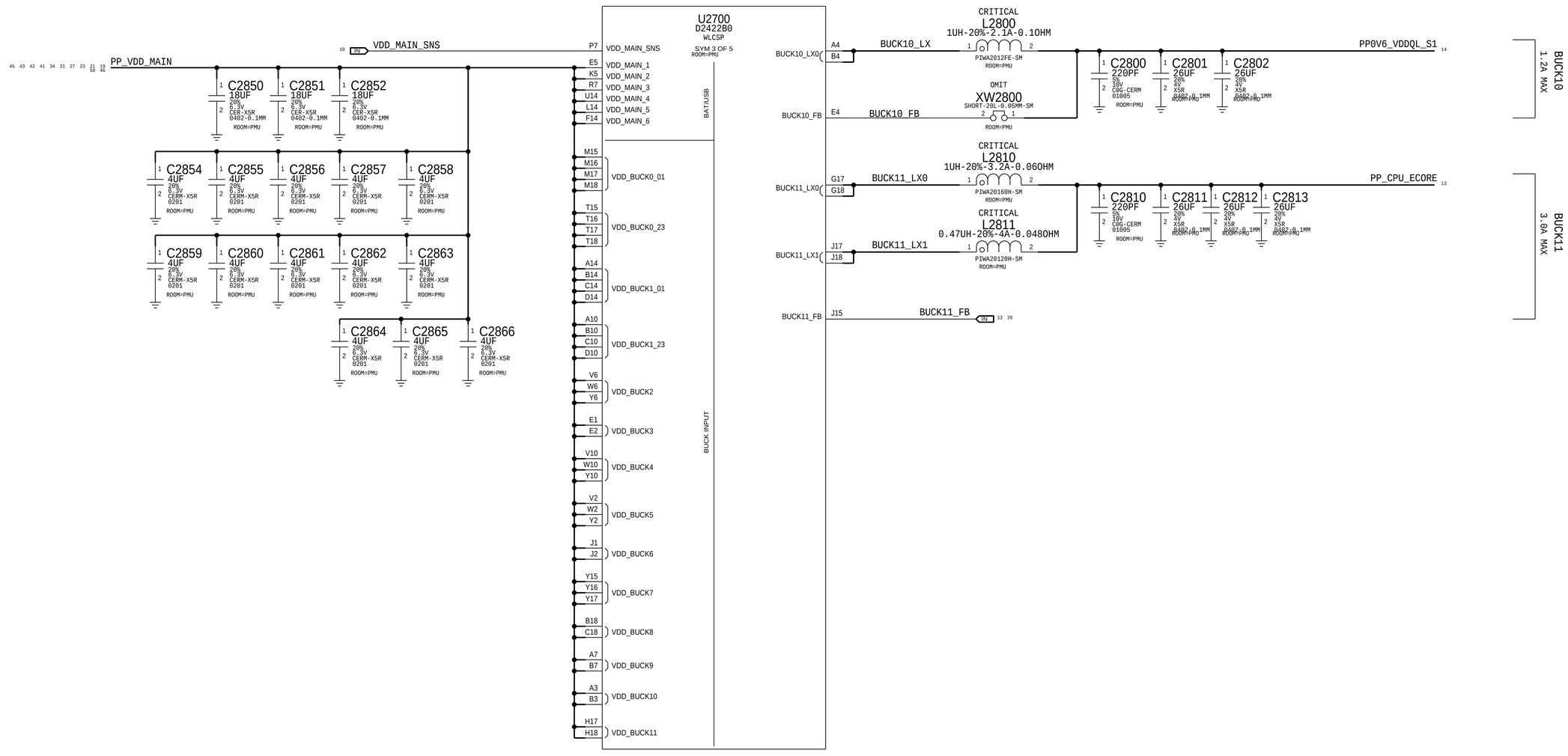

PAGE TITLE
SYSTEM POWER: PMU Bucks (2/4)

Apple Inc.

DRAWING NUMBER 051-02221 SIZE D
REVISION 9.0.0
BRANCH evt-1
PAGE 28 OF 80
SHEET 18 OF 51

NOTICE OF PROPRIETARY PROPERTY:
THE INFORMATION CONTAINED HEREIN IS THE PROPRIETARY PROPERTY OF APPLE INC.
THE POSESSOR AGREES TO THE FOLLOWING:
I TO MAINTAIN THIS DOCUMENT IN CONFIDENCE
II NOT TO REPRODUCE OR COPY IT
III NOT TO REVEAL OR PUBLISH IT IN WHOLE OR PART
IV ALL RIGHTS RESERVED

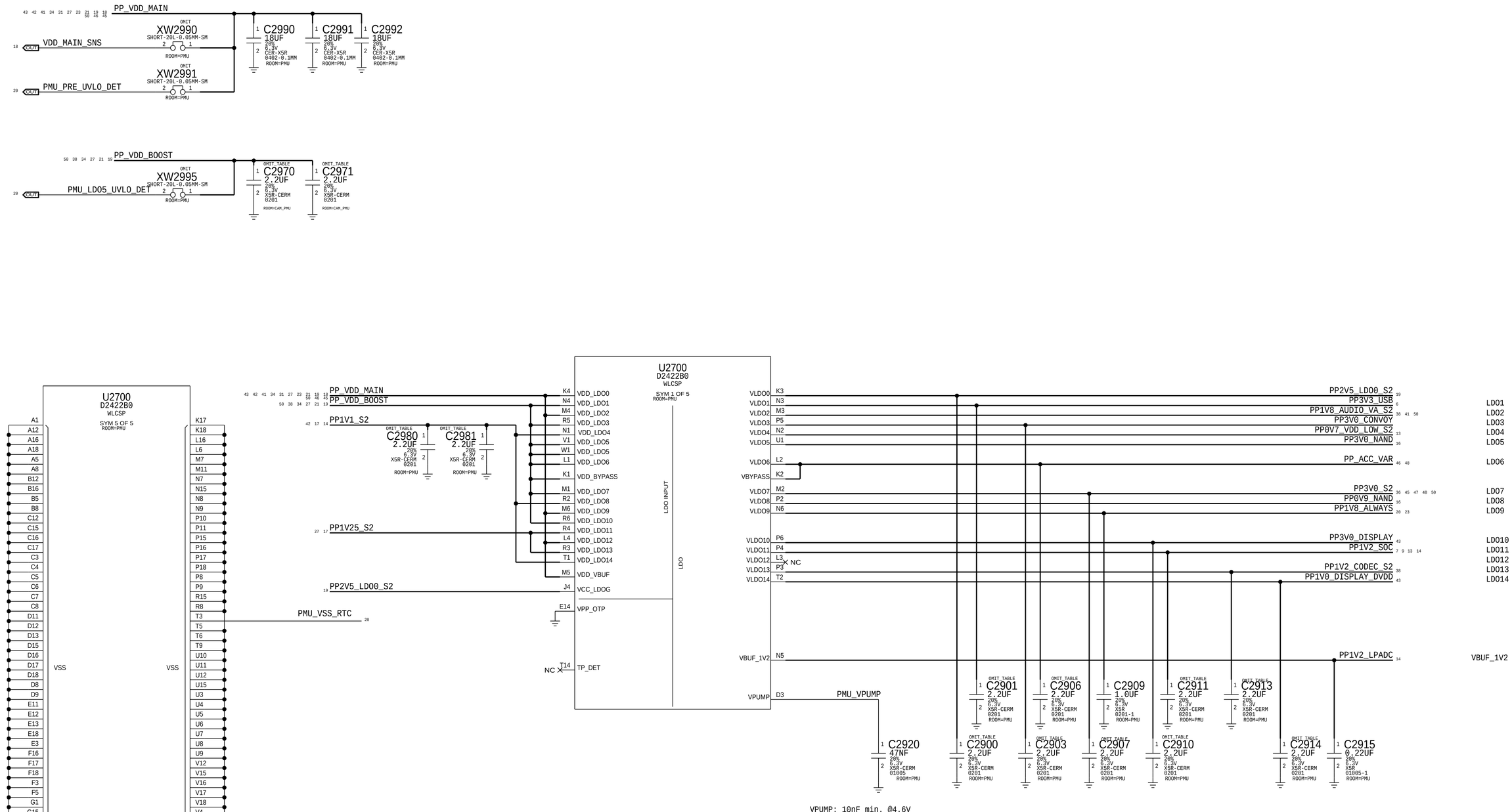

VPUMP: 10nF min. @4.6V

PAGE TITLE

SYSTEM POWER: PMU LDOs (3/4)

Apple Inc.

DRAWING NUMBER	051-02221
SIZE	D
REVISION	9.0.0
BRANCH	evt-1
PAGE	29 OF 80
SHEET	19 OF 51

NOTICE OF PROPRIETARY PROPERTY:

THE INFORMATION CONTAINED HEREIN IS THE PROPRIETARY PROPERTY OF APPLE INC.
THE POSESSOR AGREES TO THE FOLLOWING:

I TO MAINTAIN THIS DOCUMENT IN CONFIDENCE

II NOT TO REPRODUCE OR COPY IT

III NOT TO REVEAL OR PUBLISH IT IN WHOLE OR PART

IV ALL RIGHTS RESERVED

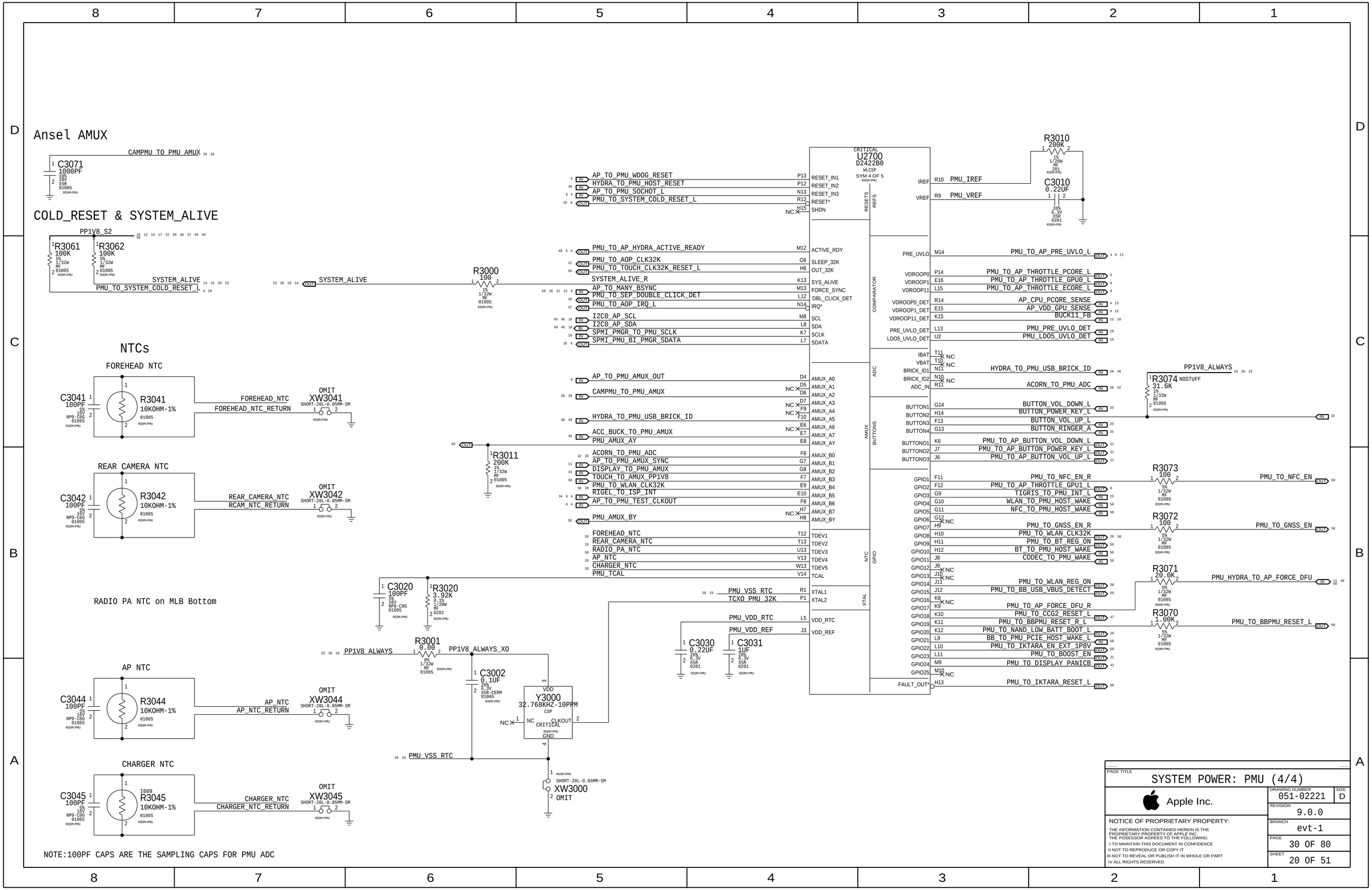

PAGE TITLE
SYSTEM POWER: PMU (4/4)

Apple Inc.

DRAWING NUMBER 051-02221 SIZE D
REVISION 9.0.0
BRANCH evt-1
PAGE 30 OF 80
SHEET 20 OF 51

NOTICE OF PROPRIETARY PROPERTY:
THE INFORMATION CONTAINED HEREIN IS THE PROPRIETARY PROPERTY OF APPLE INC.
THE POSESSOR AGREES TO THE FOLLOWING:
I TO MAINTAIN THIS DOCUMENT IN CONFIDENCE
II NOT TO REPRODUCE OR COPY IT
III NOT TO REVEAL OR PUBLISH IT IN WHOLE OR PART
IV ALL RIGHTS RESERVED

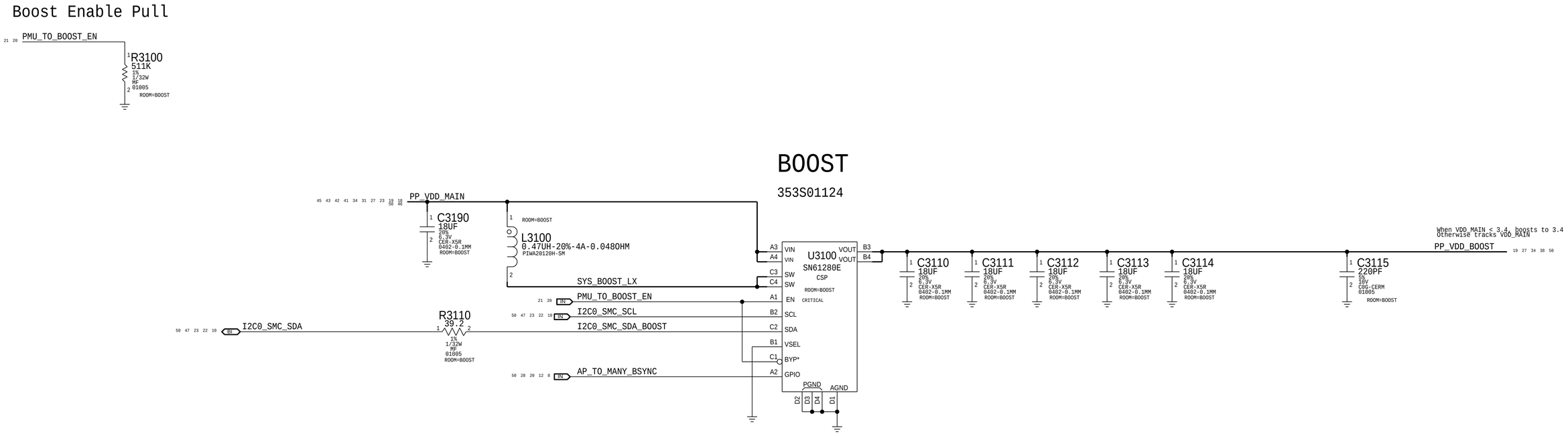

PAGE TITLE

SYSTEM POWER: Boost

Apple Inc.

DRAWING NUMBER 051-02221

SIZE D

REVISION 9.0.0

BRANCH evt-1

PAGE 31 OF 80

SHEET 21 OF 51

NOTICE OF PROPRIETARY PROPERTY:
THE INFORMATION CONTAINED HEREIN IS THE PROPRIETARY PROPERTY OF APPLE INC.
THE POSESSOR AGREES TO THE FOLLOWING:
I TO MAINTAIN THIS DOCUMENT IN CONFIDENCE
II NOT TO REPRODUCE OR COPY IT
III NOT TO REVEAL OR PUBLISH IT IN WHOLE OR PART
IV ALL RIGHTS RESERVED

BATTERY CONNECTOR

Rcpt: 516S00232
Plug: 516S00233

<-- This one on MLB

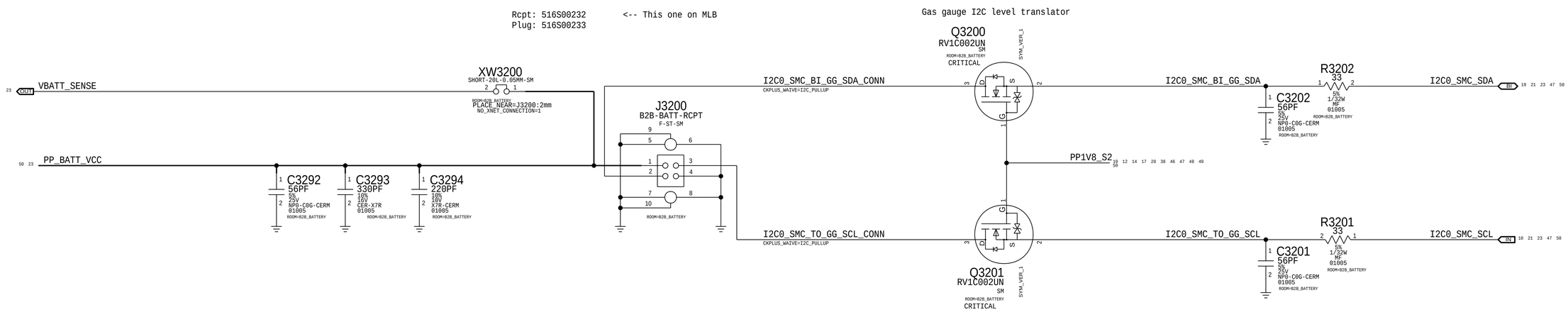

PAGE TITLE
SYSTEM POWER: B2B Battery

Apple Inc.

DRAWING NUMBER 051-02221
SIZE D
REVISION 9.0.0
BRANCH evt-1
PAGE 32 OF 80
SHEET 22 OF 51

NOTICE OF PROPRIETARY PROPERTY:
THE INFORMATION CONTAINED HEREIN IS THE PROPRIETARY PROPERTY OF APPLE INC.
THE POSESSOR AGREES TO THE FOLLOWING:
I TO MAINTAIN THIS DOCUMENT IN CONFIDENCE
II NOT TO REPRODUCE OR COPY IT
III NOT TO REVEAL OR PUBLISH IT IN WHOLE OR PART
IV ALL RIGHTS RESERVED

TIGRIS2 CHARGER

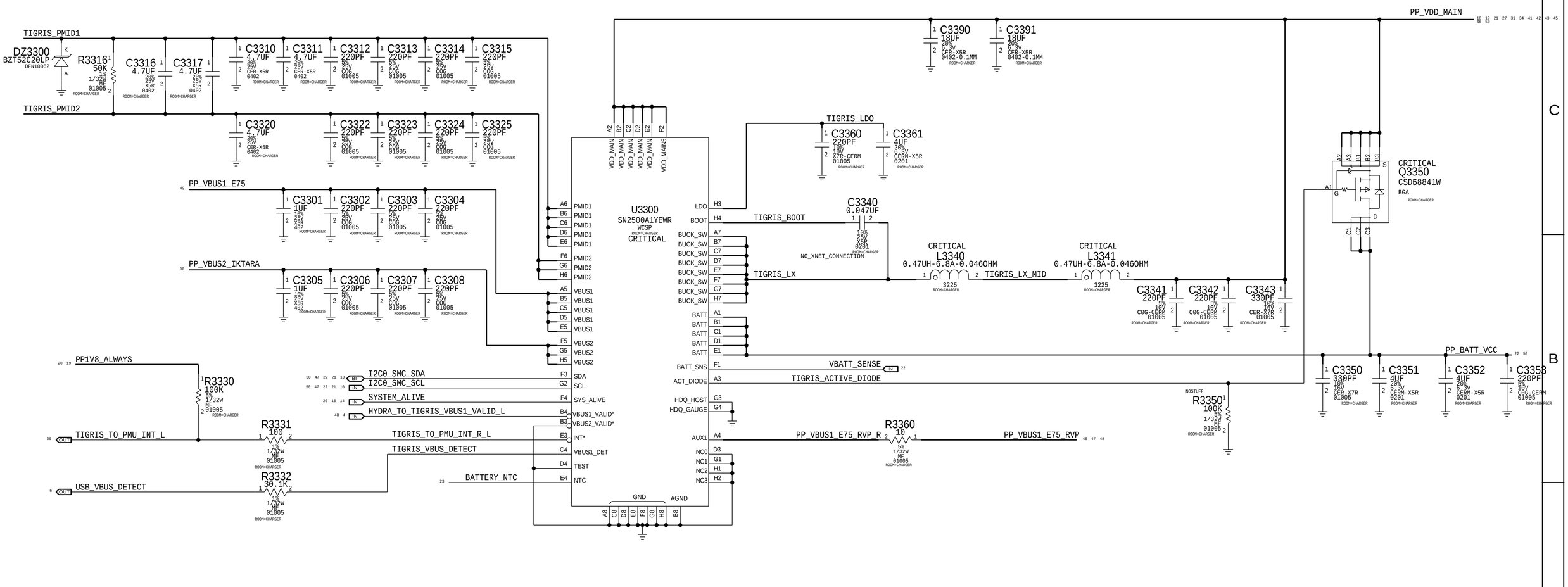

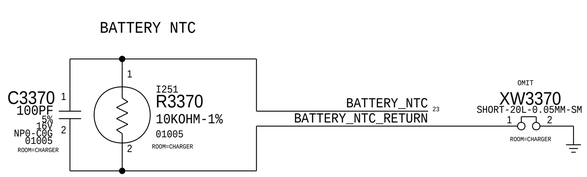

PAGE TITLE

SYSTEM POWER: Charger

Apple Inc.

DRAWING NUMBER 051-02221 SIZE D

REVISION 9.0.0

BRANCH evt-1

PAGE 33 OF 80

SHEET 23 OF 51

NOTICE OF PROPRIETARY PROPERTY:

THE INFORMATION CONTAINED HEREIN IS THE PROPRIETARY PROPERTY OF APPLE INC.
THE POSESSOR AGREES TO THE FOLLOWING:

I TO MAINTAIN THIS DOCUMENT IN CONFIDENCE

II NOT TO REPRODUCE OR COPY IT

III NOT TO REVEAL OR PUBLISH IT IN WHOLE OR PART

IV ALL RIGHTS RESERVED

Iktara Components on MLB Bottom

PAGE TITLE
SYSTEM POWER: Iktara

Apple Inc.

DRAWING NUMBER 051-02221
SIZE D
REVISION 9.0.0
BRANCH evt-1
PAGE 34 OF 80
SHEET 24 OF 51

NOTICE OF PROPRIETARY PROPERTY:
THE INFORMATION CONTAINED HEREIN IS THE PROPRIETARY PROPERTY OF APPLE INC.
THE POSESSOR AGREES TO THE FOLLOWING:
I TO MAINTAIN THIS DOCUMENT IN CONFIDENCE
II NOT TO REPRODUCE OR COPY IT
III NOT TO REVEAL OR PUBLISH IT IN WHOLE OR PART
IV ALL RIGHTS RESERVED

Cyclone Filtering

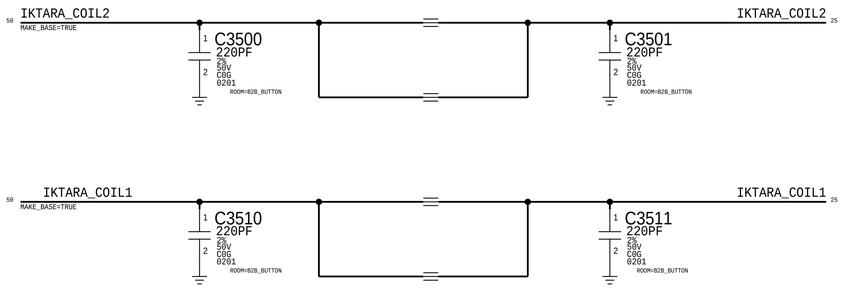

BUTTONS

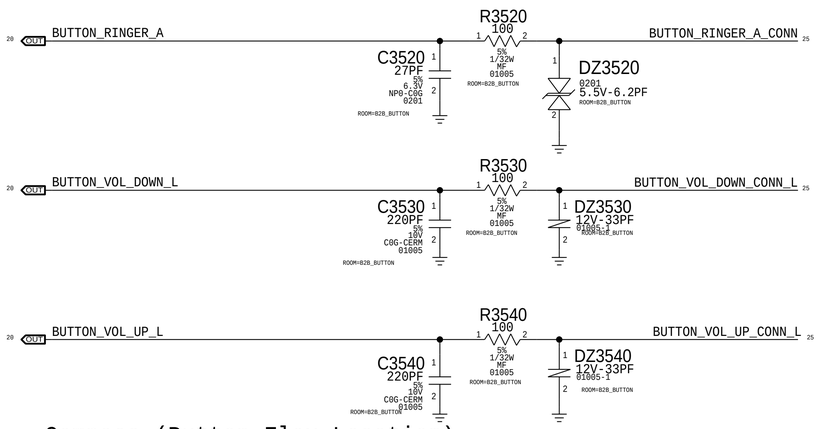

Compass (Button Flex Location)

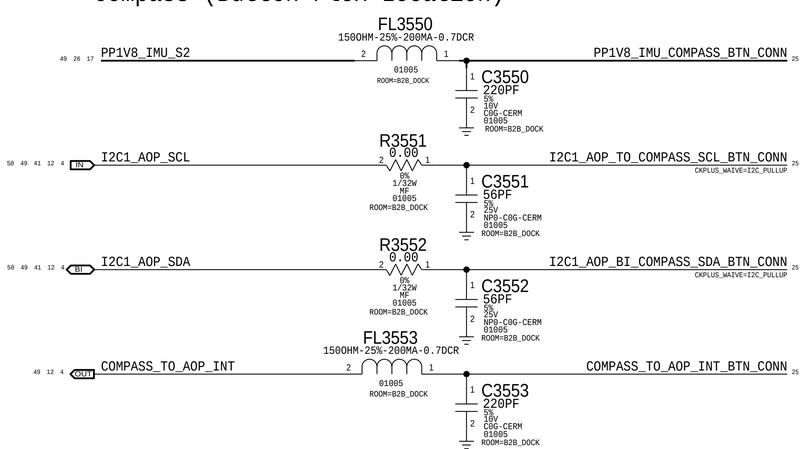

Cyclone + Button Connnector

Rcpt: 516S00289 <-- This one on MLB
Plug: 516S00290

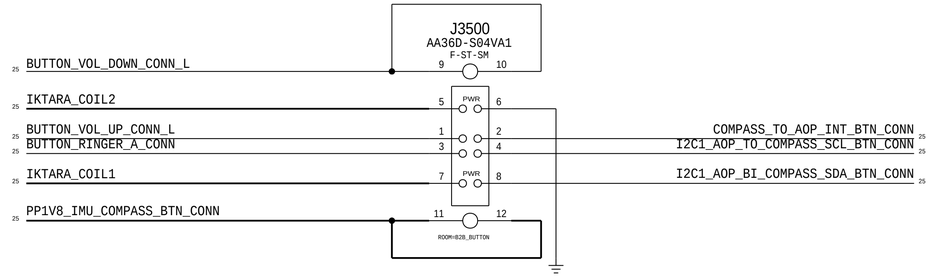

PAGE TITLE
SYSTEM POWER: B2B Cyclone + Button

Apple Inc.

DRAWING NUMBER 051-02221 SIZE D
REVISION 9.0.0
BRANCH evt-1
PAGE 35 OF 80
SHEET 25 OF 51

NOTICE OF PROPRIETARY PROPERTY:
THE INFORMATION CONTAINED HEREIN IS THE PROPRIETARY PROPERTY OF APPLE INC.
THE POSESSOR AGREES TO THE FOLLOWING:
I TO MAINTAIN THIS DOCUMENT IN CONFIDENCE
II NOT TO REPRODUCE OR COPY IT
III NOT TO REVEAL OR PUBLISH IT IN WHOLE OR PART
IV ALL RIGHTS RESERVED

Graphite - Accel & Gyro

APN: 338S00304

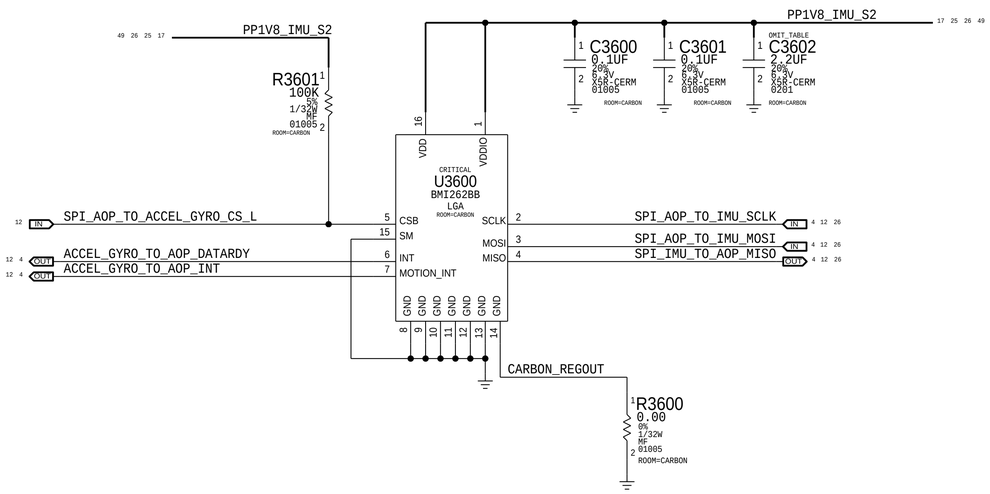

Magnesium - Compass

(On Dock or Button Flex)

Phosphorus

BOSCH (APN:338S00188)
ST (APN:338S00230)

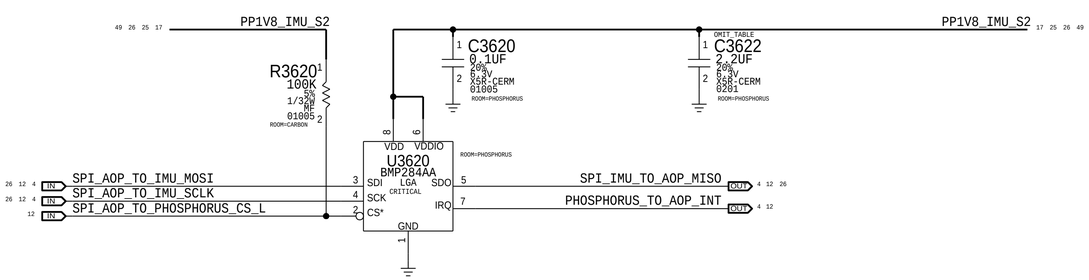

PAGE TITLE

SENSORS

Apple Inc.

DRAWING NUMBER	051-02221
SIZE	D
REVISION	9.0.0
BRANCH	evt-1
PAGE	36 OF 80
SHEET	26 OF 51

NOTICE OF PROPRIETARY PROPERTY:

THE INFORMATION CONTAINED HEREIN IS THE PROPRIETARY PROPERTY OF APPLE INC.
THE POSESSOR AGREES TO THE FOLLOWING:

I TO MAINTAIN THIS DOCUMENT IN CONFIDENCE

II NOT TO REPRODUCE OR COPY IT

III NOT TO REVEAL OR PUBLISH IT IN WHOLE OR PART

IV ALL RIGHTS RESERVED

Camera PMU

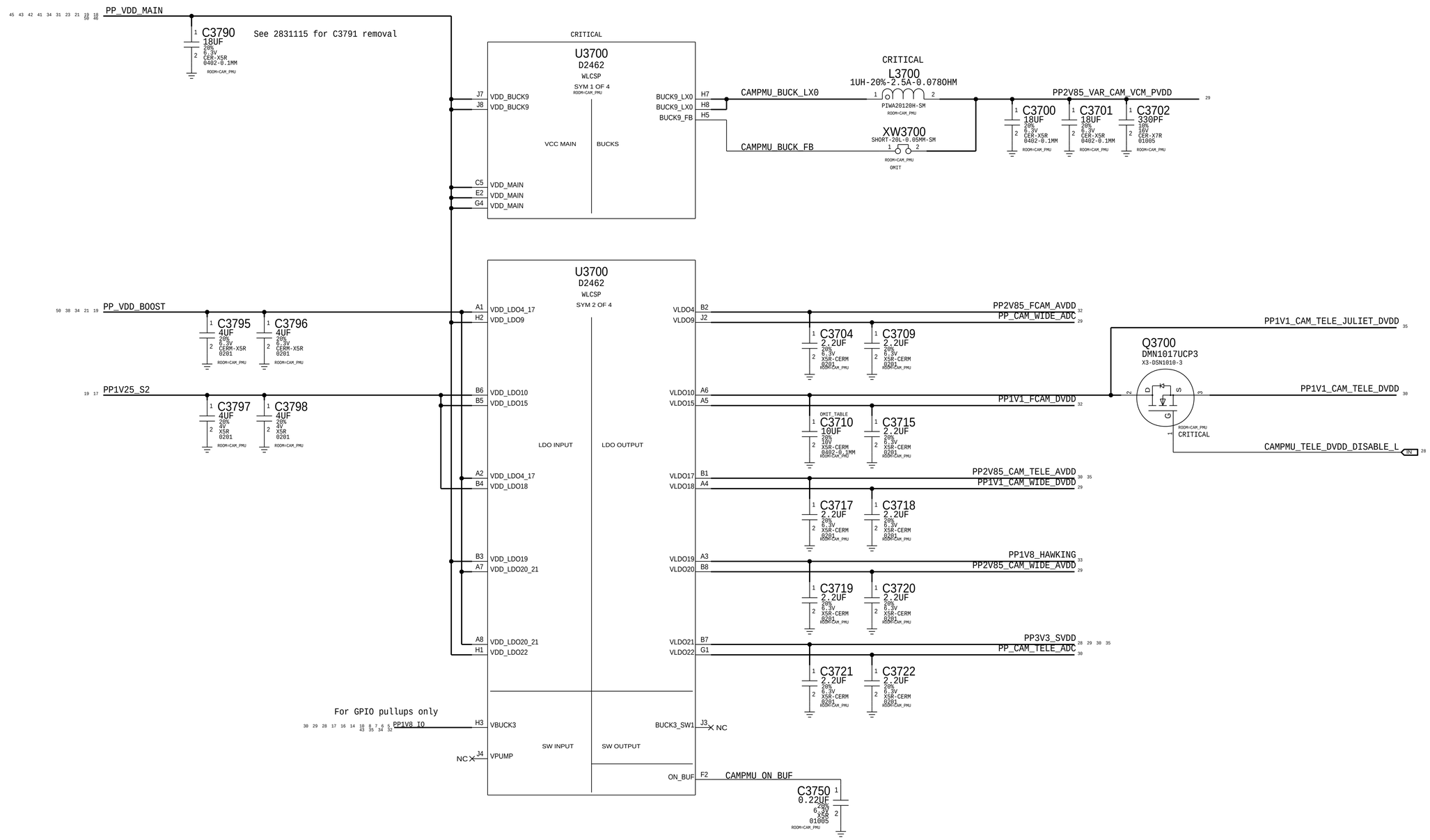

PAGE TITLE	CAMERA: PMU (1/2)
Apple Inc.	DRAWING NUMBER 051-02221 SIZE D
	REVISION 9.0.0
	BRANCH evt-1
	PAGE 37 OF 80
	SHEET 27 OF 51

NOTICE OF PROPRIETARY PROPERTY:
THE INFORMATION CONTAINED HEREIN IS THE PROPRIETARY PROPERTY OF APPLE INC.
THE POSESSOR AGREES TO THE FOLLOWING:
I TO MAINTAIN THIS DOCUMENT IN CONFIDENCE
II NOT TO REPRODUCE OR COPY IT
III NOT TO REVEAL OR PUBLISH IT IN WHOLE OR PART
IV ALL RIGHTS RESERVED

Pull Downs

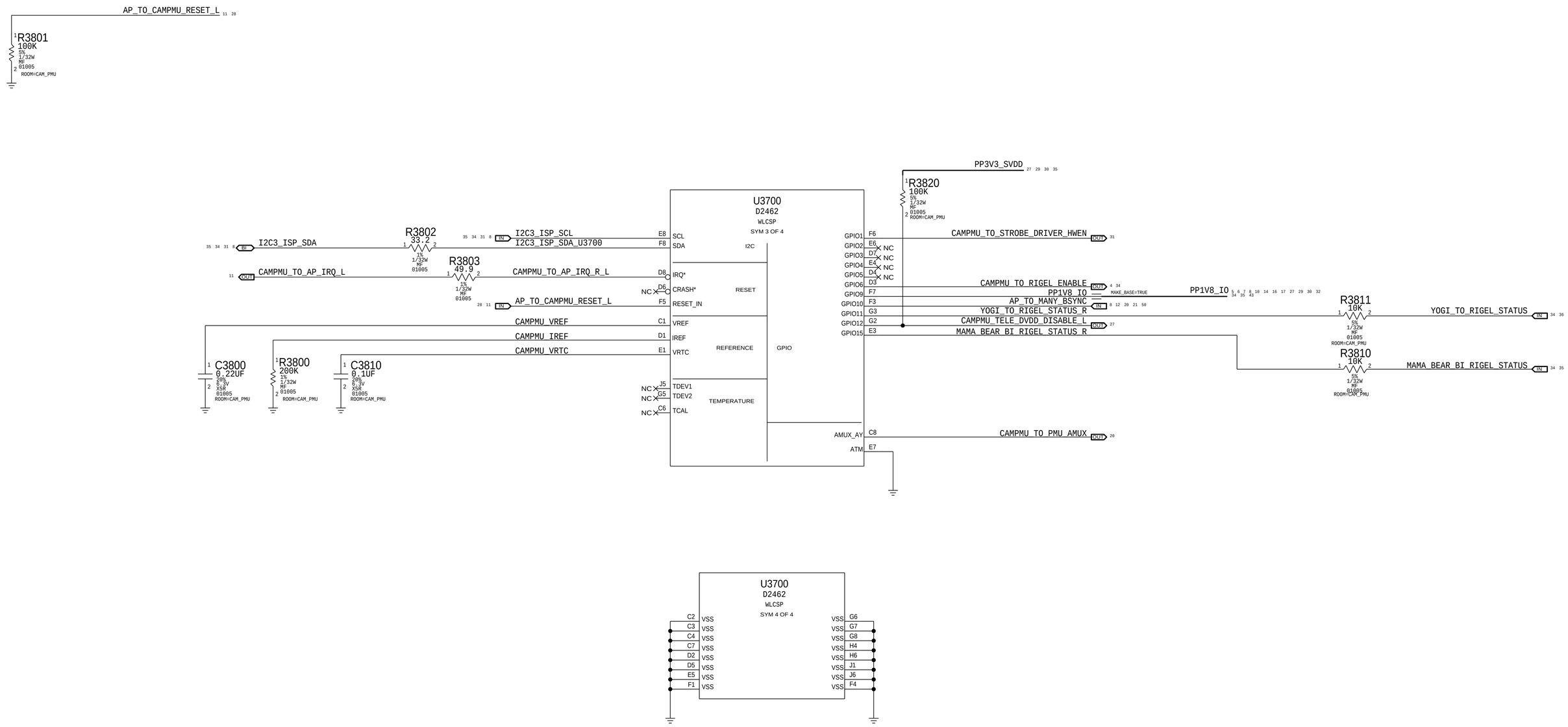

PAGE TITLE

CAMERA: PMU (2/2)

Apple Inc.

DRAWING NUMBER	051-02221
SIZE	D
REVISION	9.0.0
BRANCH	evt-1
PAGE	38 OF 80
SHEET	28 OF 51

NOTICE OF PROPRIETARY PROPERTY:
THE INFORMATION CONTAINED HEREIN IS THE PROPRIETARY PROPERTY OF APPLE INC.
THE POSESSOR AGREES TO THE FOLLOWING:
I TO MAINTAIN THIS DOCUMENT IN CONFIDENCE
II NOT TO REPRODUCE OR COPY IT
III NOT TO REVEAL OR PUBLISH IT IN WHOLE OR PART
IV ALL RIGHTS RESERVED

Wide Camera Connector

Rcpt: 516S00313 <-- This one on MLB
Plug: 516S00314

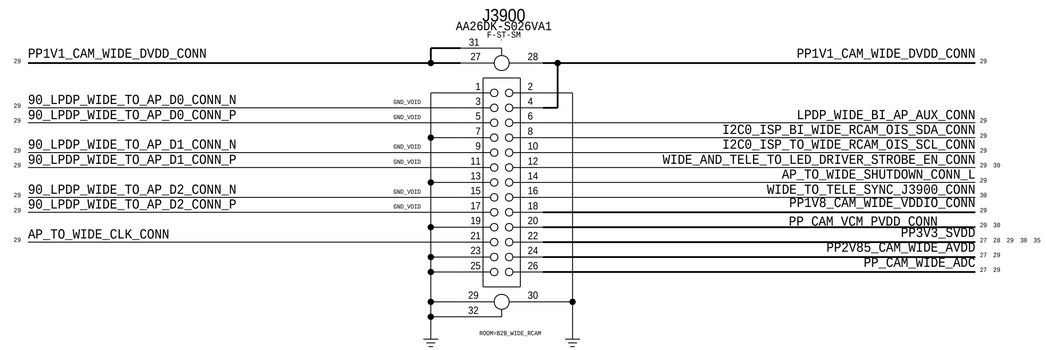

ISP I2C

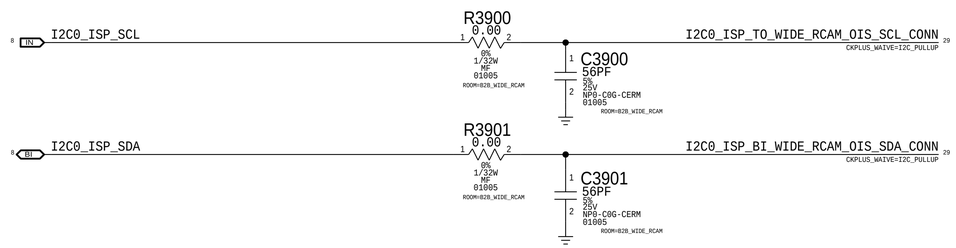

IO Filters

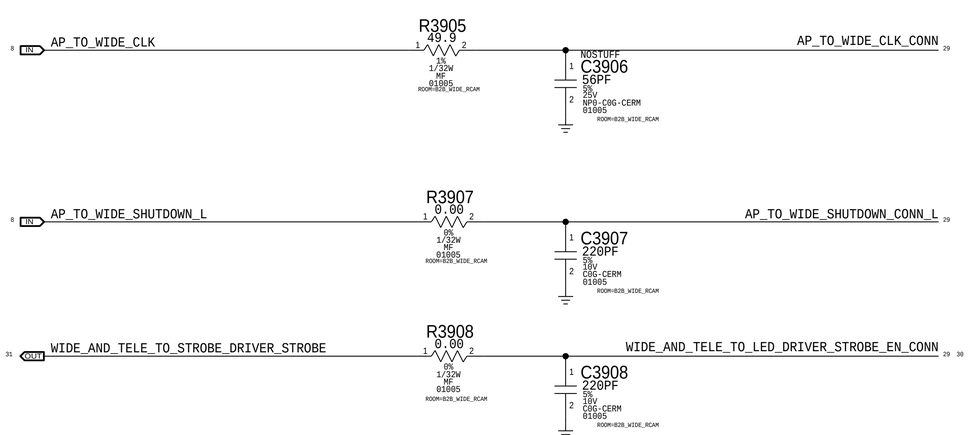

Power Filtering

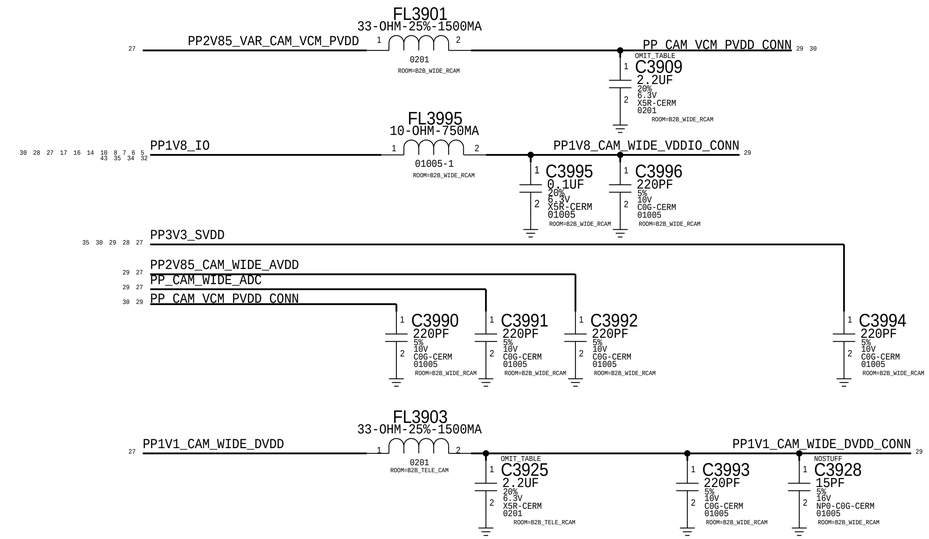

LPDP Filters

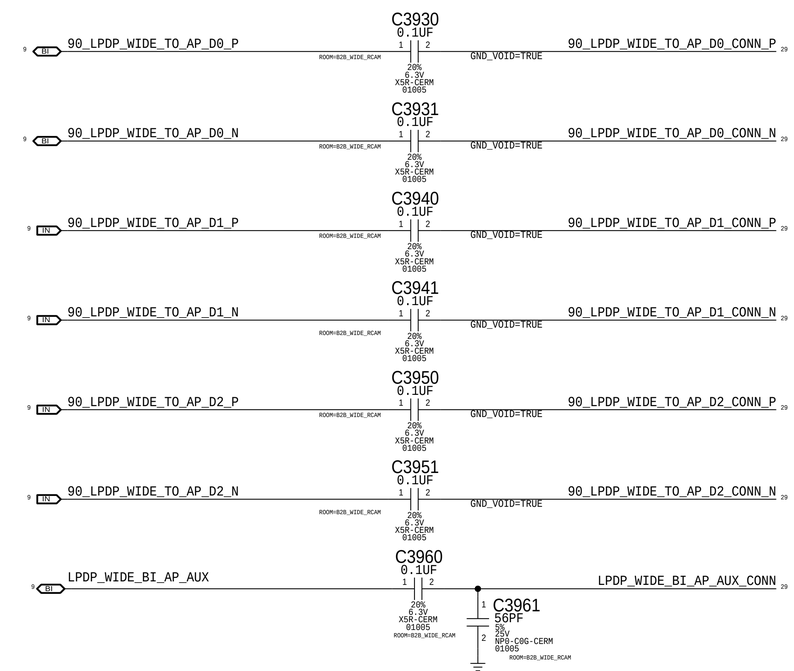

PAGE TITLE	CAMERA: B2B Wide (WY)
Apple Inc.	DRAWING NUMBER 051-02221 SIZE D
	REVISION 9.0.0
	BRANCH evt-1
	PAGE 39 OF 80
	SHEET 29 OF 51

NOTICE OF PROPRIETARY PROPERTY:
THE INFORMATION CONTAINED HEREIN IS THE PROPRIETARY PROPERTY OF APPLE INC.
THE POSESSOR AGREES TO THE FOLLOWING:
I TO MAINTAIN THIS DOCUMENT IN CONFIDENCE
II NOT TO REPRODUCE OR COPY IT
III NOT TO REVEAL OR PUBLISH IT IN WHOLE OR PART
IV ALL RIGHTS RESERVED

Tele Camera Connector

Rcpt: 516S00313 <-- This one on MLB
Plug: 516S00314

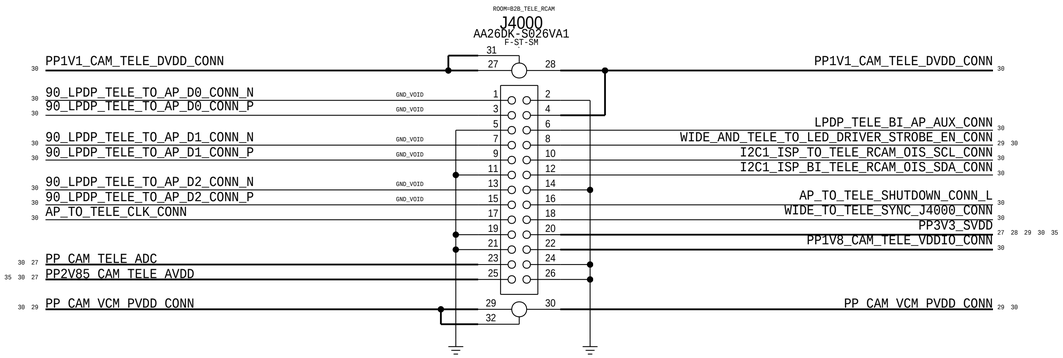

ISP I2C

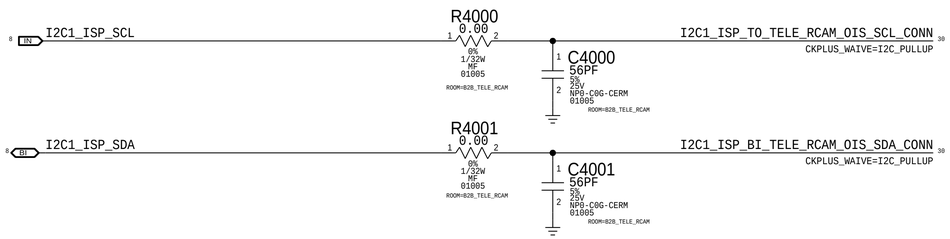

IO Filters

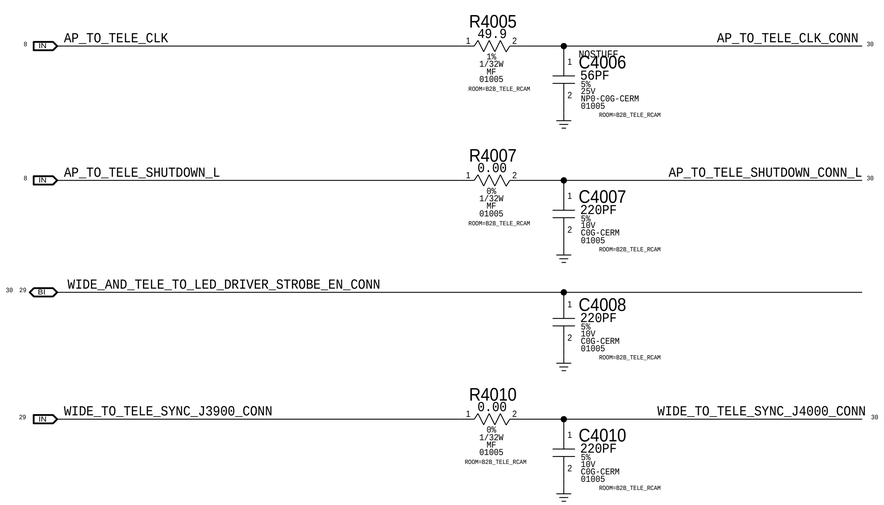

Power Filtering

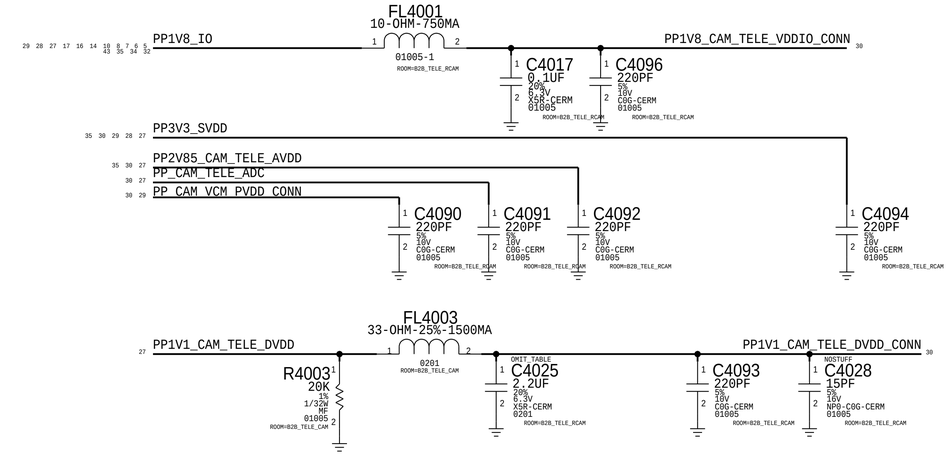

LPDP

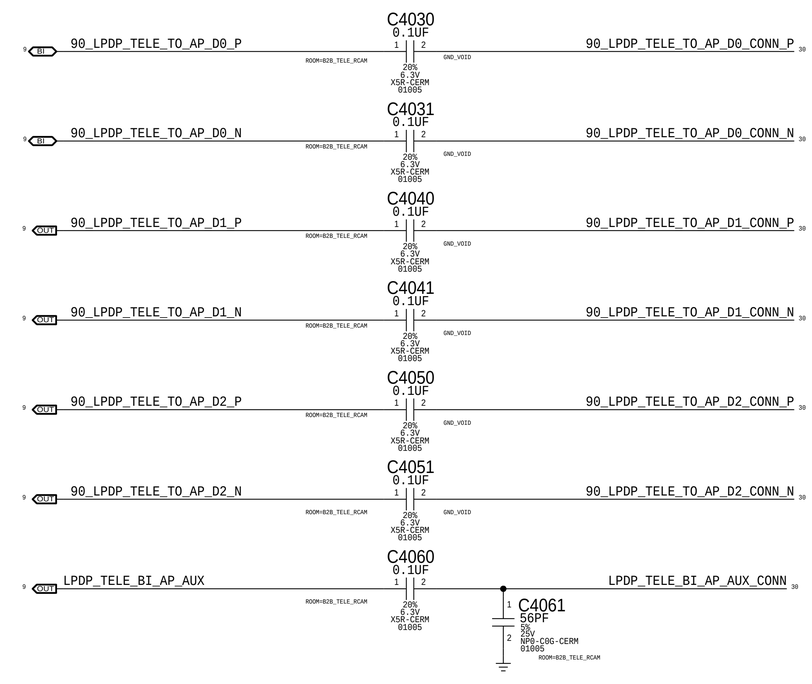

PAGE TITLE	CAMERA: B2B Tele (MT)
Apple Inc.	DRAWING NUMBER 051-02221 — SIZE D
	REVISION 9.0.0
	BRANCH evt-1
	PAGE 40 OF 80
	SHEET 30 OF 51

NOTICE OF PROPRIETARY PROPERTY:
THE INFORMATION CONTAINED HEREIN IS THE PROPRIETARY PROPERTY OF APPLE INC.
THE POSESSOR AGREES TO THE FOLLOWING:
I TO MAINTAIN THIS DOCUMENT IN CONFIDENCE
II NOT TO REPRODUCE OR COPY IT
III NOT TO REVEAL OR PUBLISH IT IN WHOLE OR PART
IV ALL RIGHTS RESERVED

LED STROBE DRIVERS (NEON)

APN:353S00558
I2C Address (7-bit): 0x63

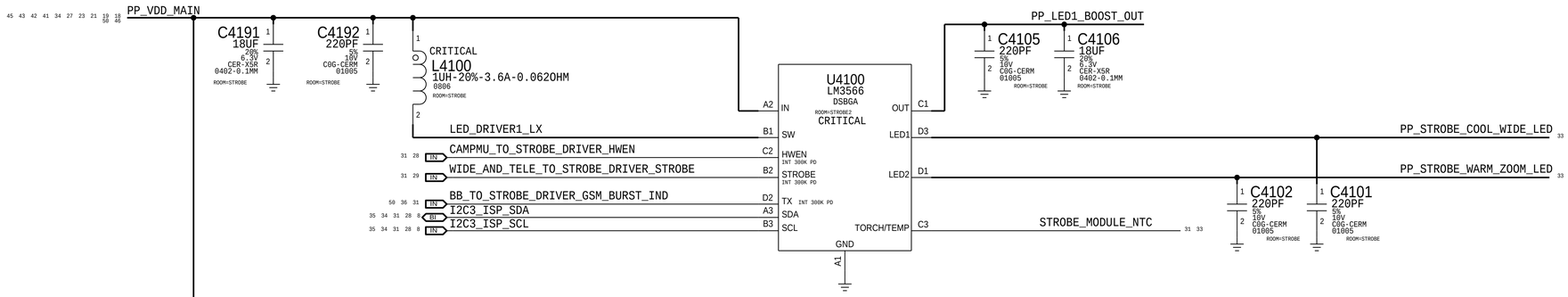

APN:353S00868
I2C Address (7-bit): 0x67

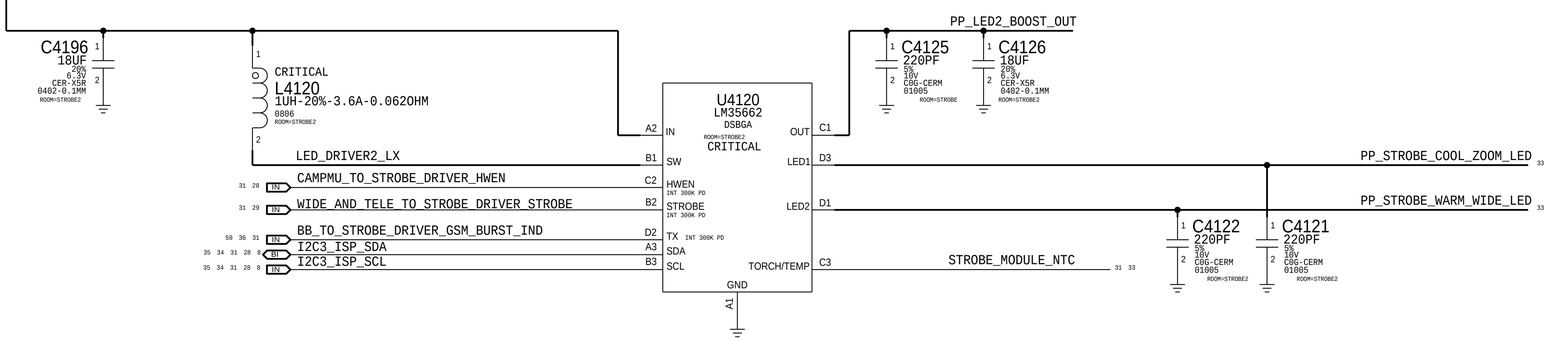

PAGE TITLE
CAMERA: Strobe Drivers

Apple Inc.

DRAWING NUMBER 051-02221 SIZE D
REVISION 9.0.0
BRANCH evt-1
PAGE 41 OF 80
SHEET 31 OF 51

NOTICE OF PROPRIETARY PROPERTY:
THE INFORMATION CONTAINED HEREIN IS THE PROPRIETARY PROPERTY OF APPLE INC.
THE POSESSOR AGREES TO THE FOLLOWING:
I TO MAINTAIN THIS DOCUMENT IN CONFIDENCE
II NOT TO REPRODUCE OR COPY IT
III NOT TO REVEAL OR PUBLISH IT IN WHOLE OR PART
IV ALL RIGHTS RESERVED

NEW HAMPSHIRE POWER

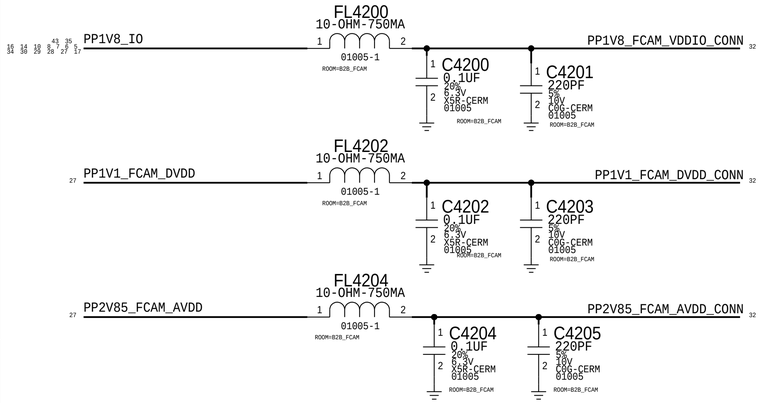

FCAM I/O

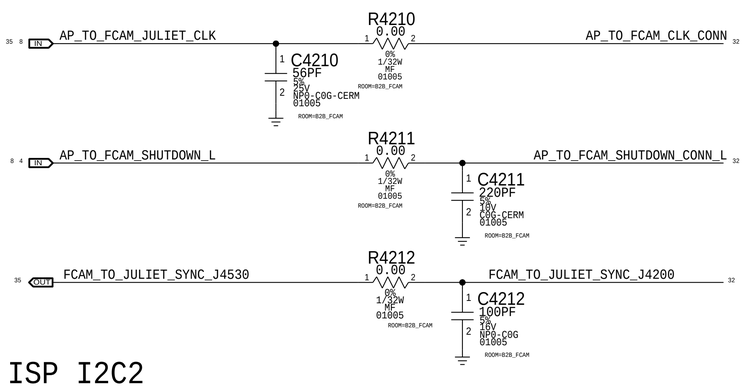

ISP I2C2

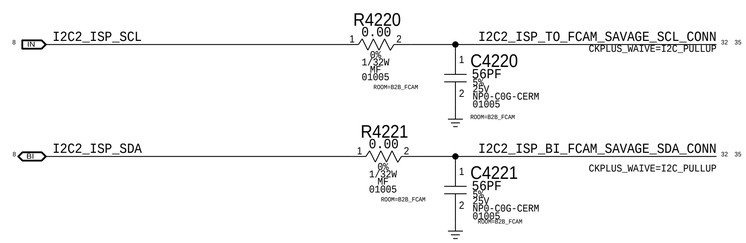

FCAM Connector

Rcpt: 516S00244 <-- This one on MLB
Plug: 516S00245

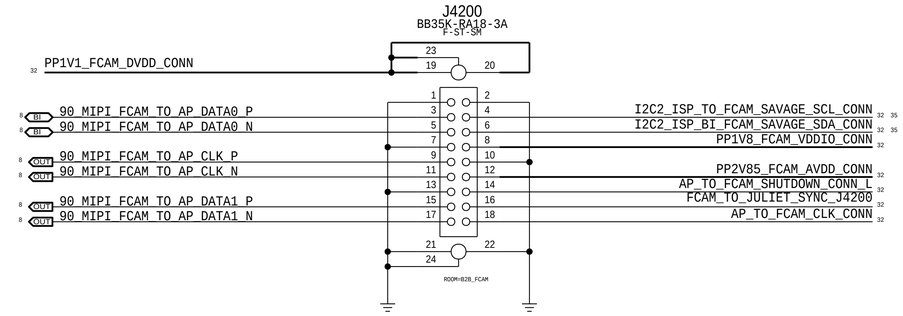

PAGE TITLE
CAMERA: B2B FCAM

Apple Inc.

DRAWING NUMBER 051-02221
SIZE D
REVISION 9.0.0
BRANCH evt-1
PAGE 42 OF 80
SHEET 32 OF 51

NOTICE OF PROPRIETARY PROPERTY:
THE INFORMATION CONTAINED HEREIN IS THE PROPRIETARY PROPERTY OF APPLE INC.
THE POSESSOR AGREES TO THE FOLLOWING:
I TO MAINTAIN THIS DOCUMENT IN CONFIDENCE
II NOT TO REPRODUCE OR COPY IT
III NOT TO REVEAL OR PUBLISH IT IN WHOLE OR PART
IV ALL RIGHTS RESERVED

HAWKING

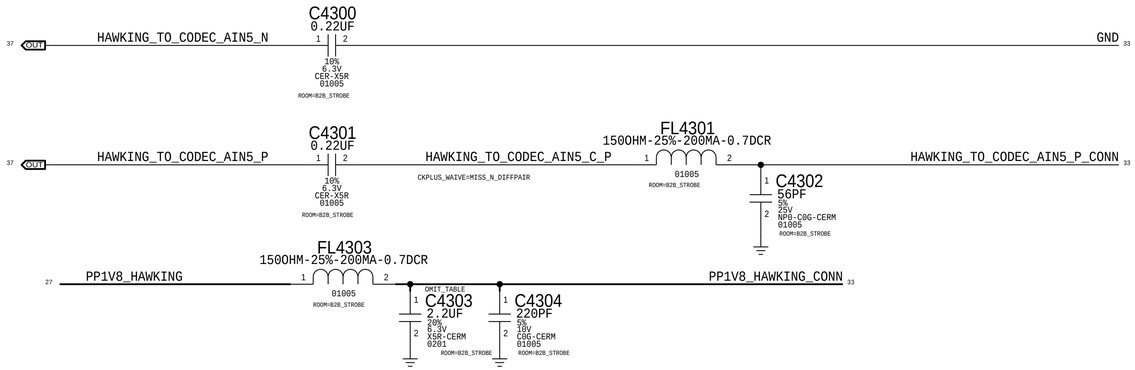

MIC2 (ANC REF)

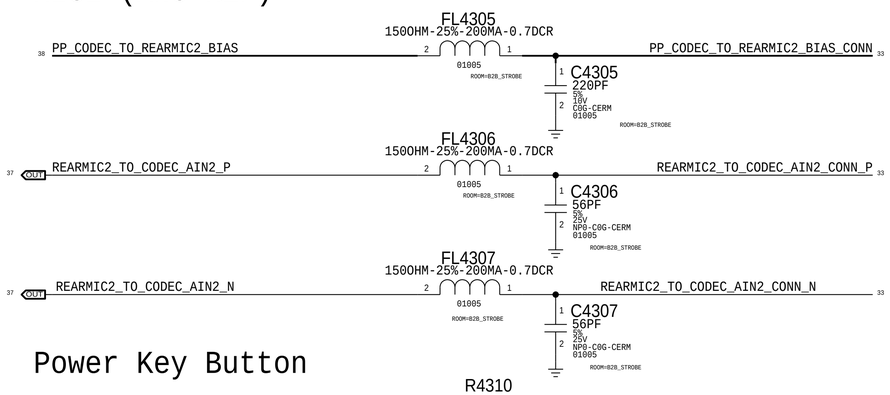

Power Key Button

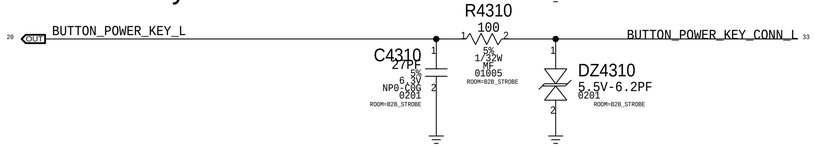

Strobe Connector

Rcpt: 516S00267 <-- This one on MLB
Plug: 516S00268

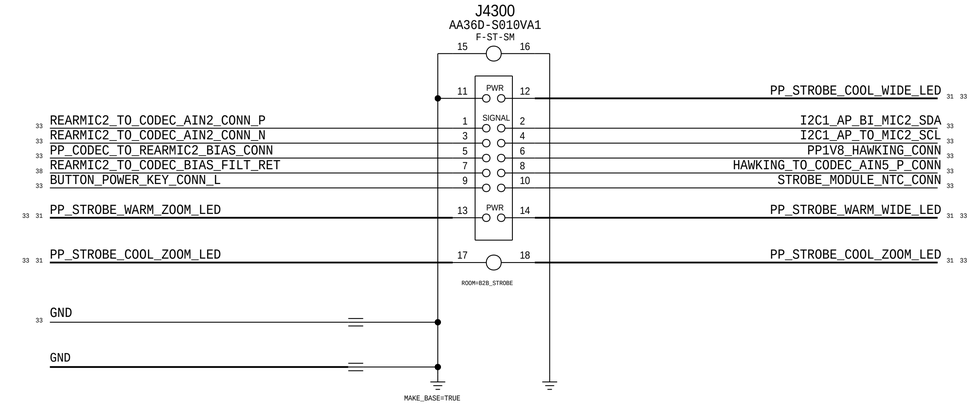

Strobe Filtering

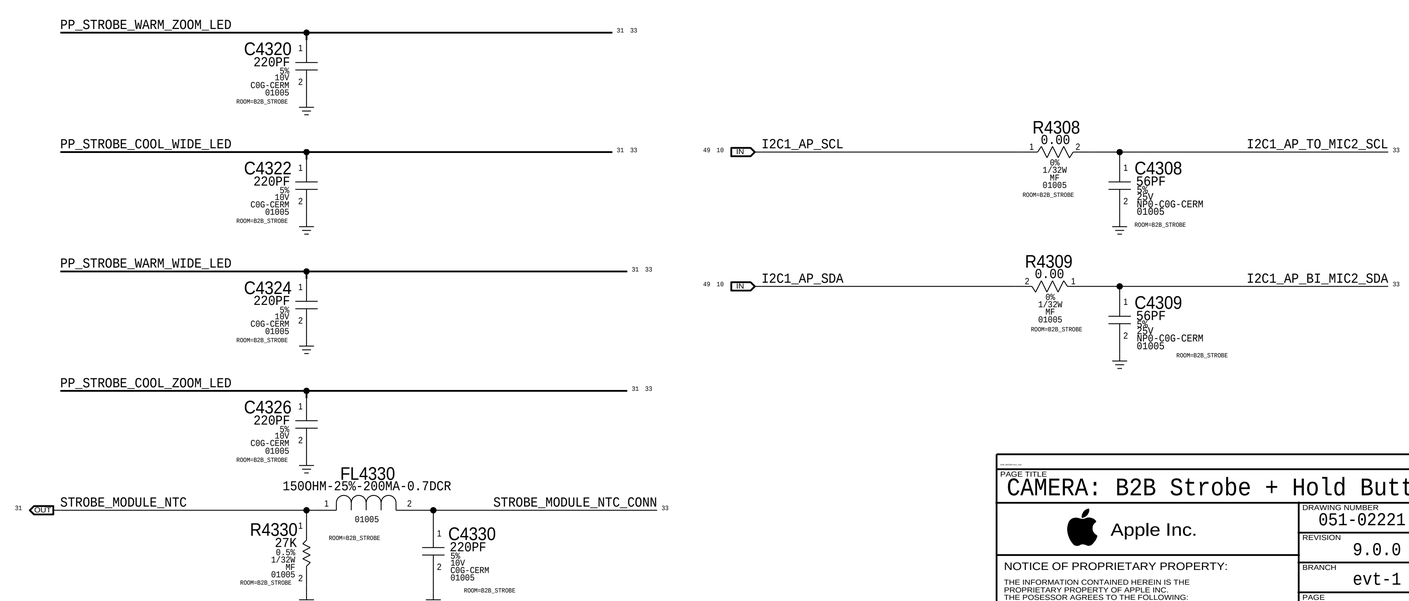

PAGE TITLE
CAMERA: B2B Strobe + Hold Button

Apple Inc.

DRAWING NUMBER	051-02221
SIZE	D
REVISION	9.0.0
BRANCH	evt-1
PAGE	43 OF 80
SHEET	33 OF 51

NOTICE OF PROPRIETARY PROPERTY:
THE INFORMATION CONTAINED HEREIN IS THE PROPRIETARY PROPERTY OF APPLE INC.
THE POSESSOR AGREES TO THE FOLLOWING:
I TO MAINTAIN THIS DOCUMENT IN CONFIDENCE
II NOT TO REPRODUCE OR COPY IT
III NOT TO REVEAL OR PUBLISH IT IN WHOLE OR PART
IV ALL RIGHTS RESERVED

Rigel Driver

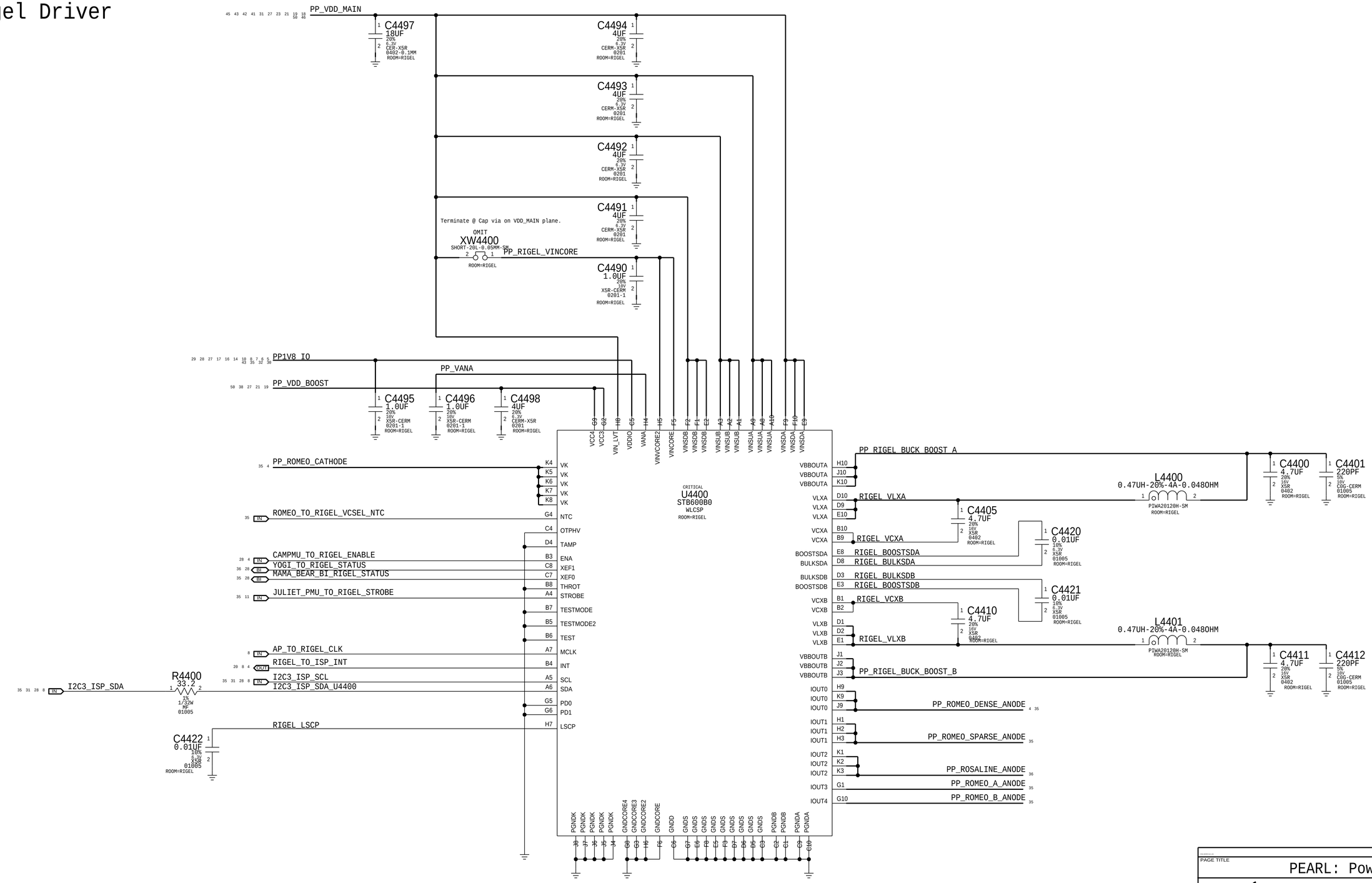

PAGE TITLE

PEARL: Power

Apple Inc.

DRAWING NUMBER	051-02221
SIZE	D
REVISION	9.0.0
BRANCH	evt-1
PAGE	44 OF 80
SHEET	34 OF 51

NOTICE OF PROPRIETARY PROPERTY:

THE INFORMATION CONTAINED HEREIN IS THE PROPRIETARY PROPERTY OF APPLE INC.
THE POSESSOR AGREES TO THE FOLLOWING:

I TO MAINTAIN THIS DOCUMENT IN CONFIDENCE

II NOT TO REPRODUCE OR COPY IT

III NOT TO REVEAL OR PUBLISH IT IN WHOLE OR PART

IV ALL RIGHTS RESERVED

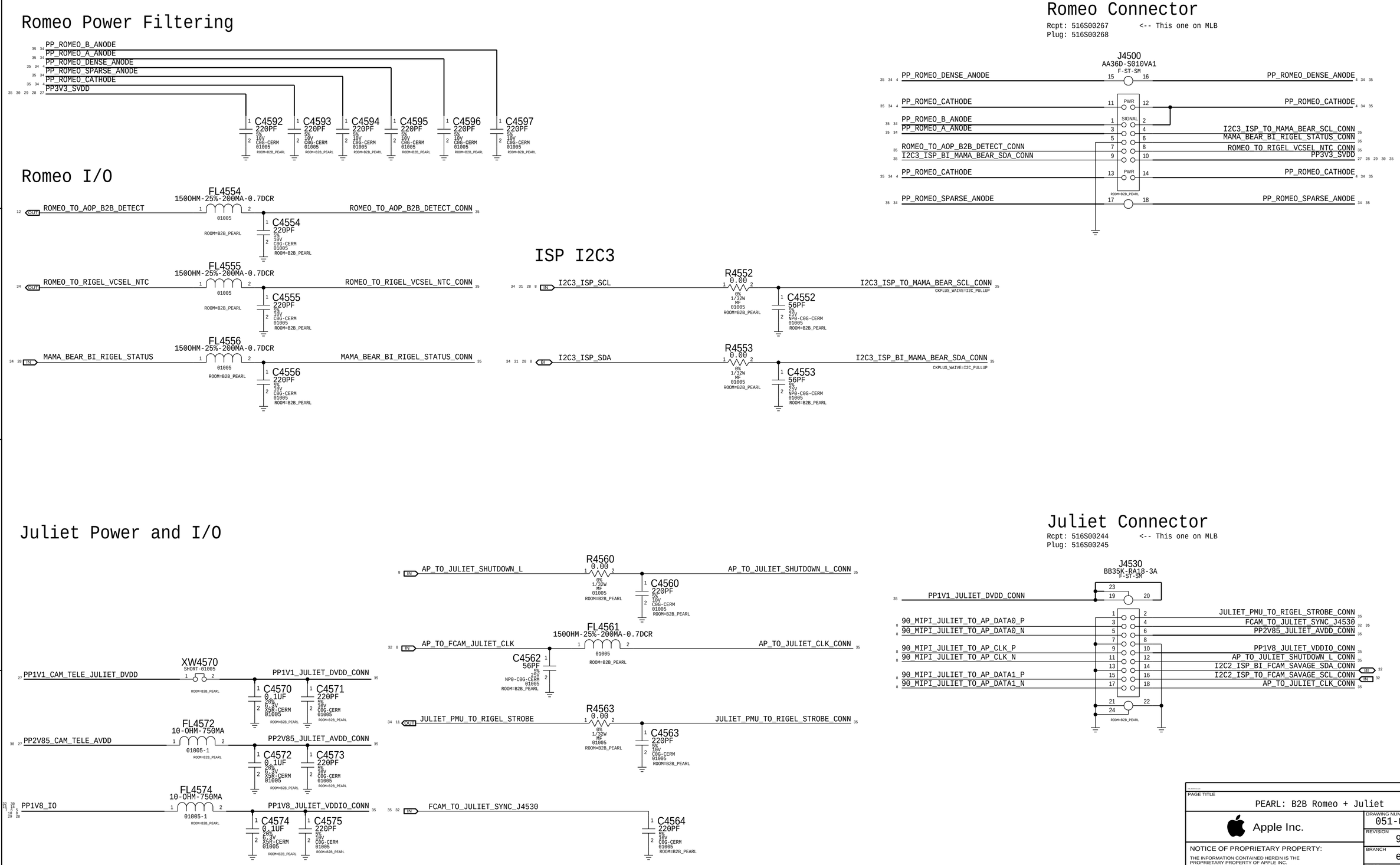
Romeo Power Filtering
PP_ROMEO_B_ANODE
PP_ROMEO_A_ANODE
PP_ROMEO_DENSE_ANODE
PP_ROMEO_SPARSE_ANODE
PP_ROMEO_CATHODE
PP3V3_SVDD
C4592 220PF
C4593 220PF
C4594 220PF
C4595 220PF
C4596 220PF
C4597 220PF
Romeo Connector
Rcpt: 516S00267 <-- This one on MLB
Plug: 516S00268
J4500
AA36D-S010VA1
F-ST-SM
PP_ROMEO_DENSE_ANODE
PP_ROMEO_CATHODE
PP_ROMEO_B_ANODE
PP_ROMEO_A_ANODE
ROMEO_TO_AOP_B2B_DETECT_CONN
I2C3_ISP_BI_MAMA_BEAR_SDA_CONN
PP_ROMEO_SPARSE_ANODE
I2C3_ISP_TO_MAMA_BEAR_SCL_CONN
MAMA_BEAR_BI_RIGEL_STATUS_CONN
ROMEO_TO_RIGEL_VCSEL_NTC_CONN
PP3V3_SVDD
Romeo I/O
FL4554 150OHM-25%-200MA-0.7DCR
ROMEO_TO_AOP_B2B_DETECT
ROMEO_TO_AOP_B2B_DETECT_CONN
C4554 220PF
FL4555 150OHM-25%-200MA-0.7DCR
ROMEO_TO_RIGEL_VCSEL_NTC
ROMEO_TO_RIGEL_VCSEL_NTC_CONN
C4555 220PF
FL4556 150OHM-25%-200MA-0.7DCR
MAMA_BEAR_BI_RIGEL_STATUS
MAMA_BEAR_BI_RIGEL_STATUS_CONN
C4556 220PF
ISP I2C3
I2C3_ISP_SCL
R4552 0.00
I2C3_ISP_TO_MAMA_BEAR_SCL_CONN
C4552 56PF
I2C3_ISP_SDA
R4553 0.00
I2C3_ISP_BI_MAMA_BEAR_SDA_CONN
C4553 56PF
Juliet Power and I/O
XW4570 SHORT-01005
PP1V1_CAM_TELE_JULIET_DVDD
PP1V1_JULIET_DVDD_CONN
C4570 0.1UF
C4571 220PF
FL4572 10-OHM-750MA
PP2V85_CAM_TELE_AVDD
PP2V85_JULIET_AVDD_CONN
C4572 0.1UF
C4573 220PF
FL4574 10-OHM-750MA
PP1V8_IO
PP1V8_JULIET_VDDIO_CONN
C4574 0.1UF
C4575 220PF
AP_TO_JULIET_SHUTDOWN_L
R4560 0.00
AP_TO_JULIET_SHUTDOWN_L_CONN
C4560 220PF
FL4561 1500HM-25%-200MA-0.7DCR
AP_TO_FCAM_JULIET_CLK
AP_TO_JULIET_CLK_CONN
C4562 56PF
JULIET_PMU_TO_RIGEL_STROBE
R4563 0.00
JULIET_PMU_TO_RIGEL_STROBE_CONN
C4563 220PF
FCAM_TO_JULIET_SYNC_J4530
C4564 220PF
Juliet Connector
Rcpt: 516S00244 <-- This one on MLB
Plug: 516S00245
J4530
BB35K-RA18-3A
F-ST-SM
PP1V1_JULIET_DVDD_CONN
JULIET_PMU_TO_RIGEL_STROBE_CONN
90_MIPI_JULIET_TO_AP_DATA0_P
90_MIPI_JULIET_TO_AP_DATA0_N
FCAM_TO_JULIET_SYNC_J4530
PP2V85_JULIET_AVDD_CONN
90_MIPI_JULIET_TO_AP_CLK_P
90_MIPI_JULIET_TO_AP_CLK_N
PP1V8_JULIET_VDDIO_CONN
AP_TO_JULIET_SHUTDOWN_L_CONN
I2C2_ISP_BI_FCAM_SAVAGE_SDA_CONN
90_MIPI_JULIET_TO_AP_DATA1_P
90_MIPI_JULIET_TO_AP_DATA1_N
I2C2_ISP_TO_FCAM_SAVAGE_SCL_CONN
AP_TO_JULIET_CLK_CONN
PAGE TITLE
PEARL: B2B Romeo + Juliet
Apple Inc.
DRAWING NUMBER 051-02221
SIZE D
REVISION 9.0.0
BRANCH evt-1
PAGE 45 OF 80
SHEET 35 OF 51
NOTICE OF PROPRIETARY PROPERTY:
THE INFORMATION CONTAINED HEREIN IS THE PROPRIETARY PROPERTY OF APPLE INC.
THE POSESSOR AGREES TO THE FOLLOWING:
I TO MAINTAIN THIS DOCUMENT IN CONFIDENCE
II NOT TO REPRODUCE OR COPY IT
III NOT TO REVEAL OR PUBLISH IT IN WHOLE OR PART
IV ALL RIGHTS RESERVED

AOP I2C

12 IN I2C0_AOP_SCL — R4600 0.00 (0% 1/32W MF 01005 ROOM=B2B_PEARL) — C4600 56PF (5% 25V NPO-C0G-CERM 01005 ROOM=B2B_PEARL) — I2C0_AOP_TO_PROX_ALS_YOGI_SCL_CONN 36 (CKPLUS_WAIVE=I2C_PULLUP)

12 BI I2C0_AOP_SDA — R4601 0.00 (0% 1/32W MF 01005 ROOM=B2B_PEARL) — C4601 56PF (5% 25V NPO-C0G-CERM 01005 ROOM=B2B_PEARL) — I2C0_AOP_BI_PROX_ALS_YOGI_SDA_CONN 36 (CKPLUS_WAIVE=I2C_PULLUP)

Yogi Signals

34 28 BI YOGI_TO_RIGEL_STATUS — FL4650 1500HM-25%-200MA-0.7DCR (01005 ROOM=B2B_PEARL) — C4650 220PF (5% 10V C0G-CERM 01005 ROOM=B2B_PEARL) — YOGI_TO_RIGEL_STATUS_CONN 36

Rosaline + Misc Connector

Rcpt: 516S00325 <-- This one on MLB
Plug: 516S00326

J4600 AA26DK-S028VA1 F-ST-SM (ROOM=B2B_PEARL)

XW4600 (ROOM=B2B_PEARL OMIT) SHORT-20L-0.05MM-SM

38 FRONTMIC3_TO_CODEC_BIAS_FILT_RET

36 FRONTMIC3_TO_CODEC_AIN3_CONN_N
36 PP3V0_YOGI_PROX_ALS_CONN
36 PP_ROSALINE_ANODE
36 COIL_TO_SPKRAMP_TOP_VSENSE_POS_CONN
50 36 SPKRAMP_TOP_TO_COIL_OUT_NEG
36 CODEC_AOUT_TO_HAC_CONN_P
50 36 SPKRAMP_TOP_TO_COIL_OUT_POS

FRONTMIC3_TO_CODEC_AIN3_CONN_P 36
PP_CODEC_TO_FRONTMIC3_BIAS_CONN 36
YOGI_TO_RIGEL_STATUS_CONN 36
PROX_BI_AP_AOP_INT_CONN_L 36
I2C0_AOP_BI_PROX_ALS_YOGI_SDA_CONN 36
I2C0_AOP_TO_PROX_ALS_YOGI_SCL_CONN 36
ALS_TO_AOP_INT_CONN_L 36
PP_ROSALINE_ANODE 34 36
BB_TO_STROBE_DRIVER_GSM_BURST_IND_CONN 36
COIL_TO_SPKRAMP_TOP_VSENSE_NEG_CONN 36
SPKRAMP_TOP_TO_COIL_OUT_NEG 36 50
CODEC_AOUT_TO_HAC_CONN_N 36
SPKRAMP_TOP_TO_COIL_OUT_POS 36 50

SPEAKER2

50 36 IN SPKRAMP_TOP_TO_COIL_OUT_POS — C4631 220PF (5% 10V C0G-CERM 01005 ROOM=B2B_PEARL) — C4635 820PF (10% 10V X5R 01005 ROOM=B2B_PEARL) — C4630 220PF (5% 10V C0G-CERM 01005 ROOM=B2B_PEARL)

50 36 IN SPKRAMP_TOP_TO_COIL_OUT_NEG — C4636 820PF (10% 10V X5R 01005 ROOM=B2B_PEARL) — C4632 220PF (5% 10V C0G-CERM 01005 ROOM=B2B_PEARL)

50 OUT COIL_TO_SPKRAMP_TOP_VSENSE_POS — C4633 220PF (NOSTUFF 5% 10V C0G-CERM 01005 ROOM=B2B_PEARL) — R4633 0.00 (0% 1/32W MF 01005 ROOM=B2B_PEARL) — COIL_TO_SPKRAMP_TOP_VSENSE_POS_CONN 36

PP_ROSALINE_ANODE 34 36 — C4660 220PF (5% 10V C0G-CERM 01005 ROOM=B2B_PEARL)

50 OUT COIL_TO_SPKRAMP_TOP_VSENSE_NEG — C4634 220PF (NOSTUFF 5% 10V C0G-CERM 01005 ROOM=B2B_PEARL) — R4634 0.00 (0% 1/32W MF 01005 ROOM=B2B_PEARL) — COIL_TO_SPKRAMP_TOP_VSENSE_NEG_CONN 36

MIC3

38 PP_CODEC_TO_FRONTMIC3_BIAS — FL4640 1500HM-25%-200MA-0.7DCR (01005 ROOM=B2B_PEARL) — DZ4640 6.8V-100PF (01005 ROOM=B2B_PEARL) — PP_CODEC_TO_FRONTMIC3_BIAS_CONN 36

37 OUT FRONTMIC3_TO_CODEC_AIN3_N — FL4641 1500HM-25%-200MA-0.7DCR (01005 ROOM=B2B_PEARL) — DZ4641 6.8V-100PF (01005 ROOM=B2B_PEARL) — FRONTMIC3_TO_CODEC_AIN3_CONN_N 36

37 OUT FRONTMIC3_TO_CODEC_AIN3_P — FL4642 1500HM-25%-200MA-0.7DCR (01005 ROOM=B2B_PEARL) — DZ4642 6.8V-100PF (01005 ROOM=B2B_PEARL) — FRONTMIC3_TO_CODEC_AIN3_CONN_P 36

37 OUT CODEC_AOUT_TO_HAC_P — FL4643 1500HM-25%-200MA-0.7DCR (01005 ROOM=B2B_PEARL) — DZ4643 6.8V-100PF (01005 ROOM=B2B_PEARL) — CODEC_AOUT_TO_HAC_CONN_P 36

37 OUT CODEC_AOUT_TO_HAC_N — FL4644 1500HM-25%-200MA-0.7DCR (01005 ROOM=B2B_PEARL) — DZ4644 6.8V-100PF (01005 ROOM=B2B_PEARL) — CODEC_AOUT_TO_HAC_CONN_N 36

PROX & ALS POWER

48 47 45 13 50 PP3V0_S2 — R4611 0.00 (0% 1/32W MF 01005 ROOM=B2B_PEARL) — C4613 2.2UF (OMIT_TABLE 20% 6.3V X5R-CERM 0201 ROOM=B2B_PEARL) — C4614 220PF (5% 10V C0G-CERM 01005 ROOM=B2B_PEARL) — PP3V0_YOGI_PROX_ALS_CONN 36

PROX/ALS I/O

12 BI PROX_BI_AP_AOP_INT_L — R4617 240 (1% 1/32W MF 01005 ROOM=B2B_PEARL) — C4617 220PF (5% 10V C0G-CERM 01005 ROOM=B2B_PEARL) — PROX_BI_AP_AOP_INT_CONN_L 36

12 OUT ALS_TO_AOP_INT_L — FL4618 1500HM-25%-200MA-0.7DCR (01005 ROOM=B2B_PEARL) — C4618 220PF (5% 10V C0G-CERM 01005 ROOM=B2B_PEARL) — ALS_TO_AOP_INT_CONN_L 36

50 31 IN BB_TO_STROBE_DRIVER_GSM_BURST_IND — FL4619 NOSTUFF 1500HM-25%-200MA-0.7DCR (01005 ROOM=B2B_PEARL) — R4619 0.00 (0% 1/32W MF 01005 ROOM=B2B_PEARL) — BB_TO_STROBE_DRIVER_GSM_BURST_IND_CONN 36

PAGE TITLE	PEARL: B2B Rosaline + Misc
Apple Inc.	DRAWING NUMBER 051-02221 SIZE D
	REVISION 9.0.0
	BRANCH evt-1
	PAGE 46 OF 80
	SHEET 36 OF 51

NOTICE OF PROPRIETARY PROPERTY:
THE INFORMATION CONTAINED HEREIN IS THE PROPRIETARY PROPERTY OF APPLE INC.
THE POSESSOR AGREES TO THE FOLLOWING:
I TO MAINTAIN THIS DOCUMENT IN CONFIDENCE
II NOT TO REPRODUCE OR COPY IT
III NOT TO REVEAL OR PUBLISH IT IN WHOLE OR PART
IV ALL RIGHTS RESERVED

CALLAN AUDIO CODEC (ANALOG INPUTS & OUTPUTS)

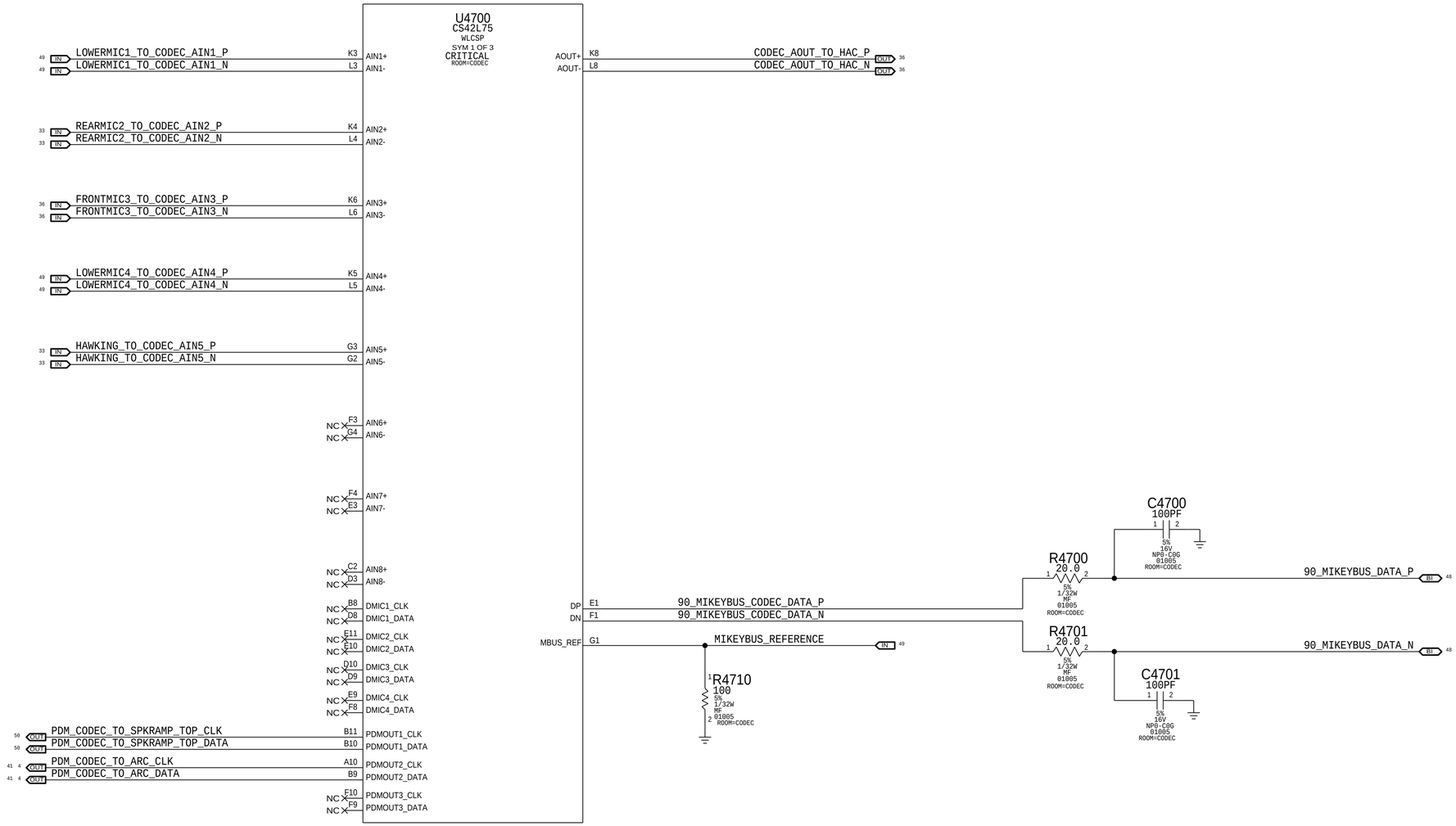

PAGE TITLE

AUDIO: CODEC (1/2)

Apple Inc.

DRAWING NUMBER 051-02221 SIZE D

REVISION 9.0.0

BRANCH evt-1

PAGE 47 OF 80

SHEET 37 OF 51

NOTICE OF PROPRIETARY PROPERTY:

THE INFORMATION CONTAINED HEREIN IS THE PROPRIETARY PROPERTY OF APPLE INC.
THE POSESSOR AGREES TO THE FOLLOWING:

I TO MAINTAIN THIS DOCUMENT IN CONFIDENCE

II NOT TO REPRODUCE OR COPY IT

III NOT TO REVEAL OR PUBLISH IT IN WHOLE OR PART

IV ALL RIGHTS RESERVED

CALLAN AUDIO CODEC (POWER & I/O)

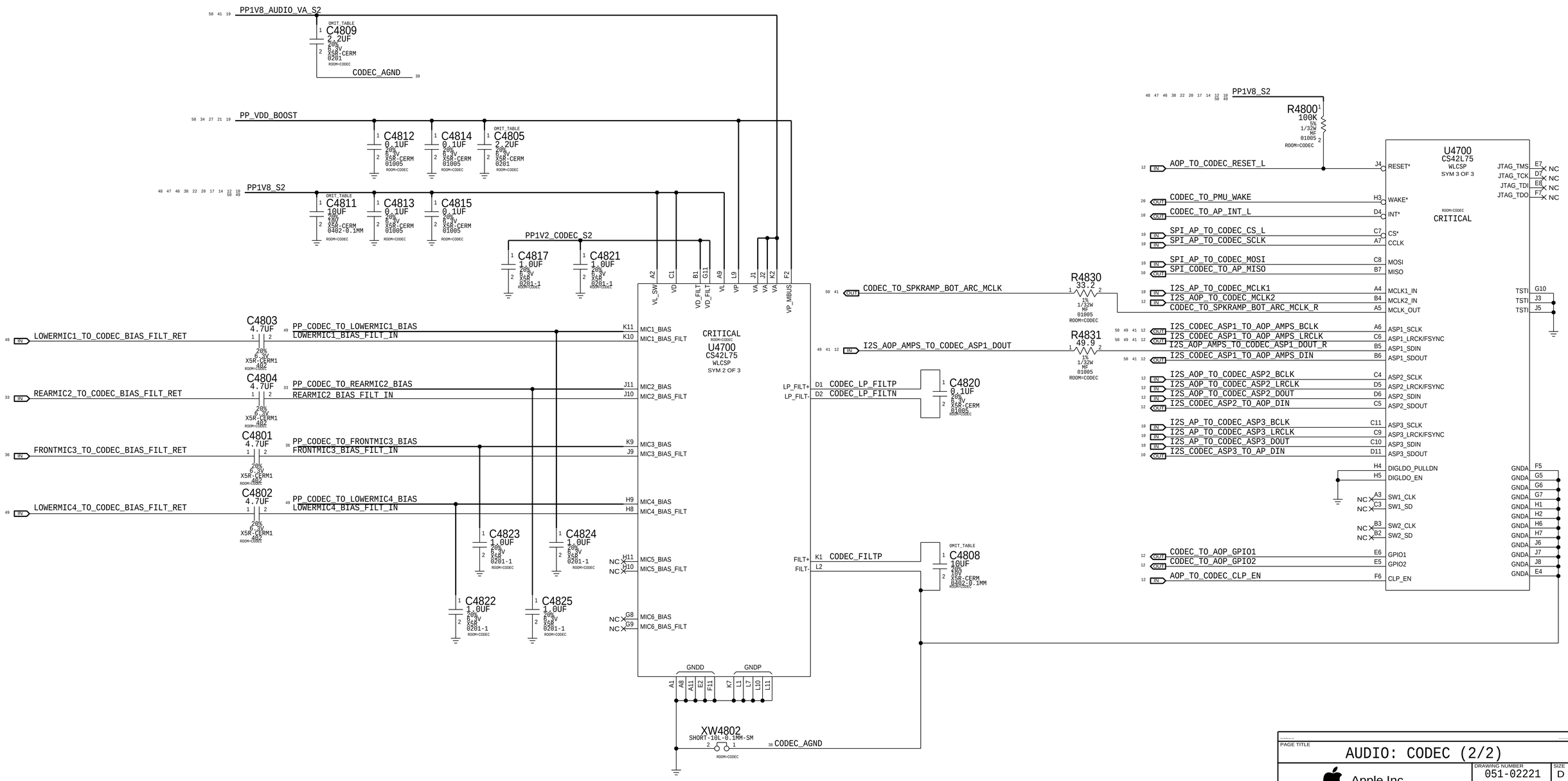

PAGE TITLE	AUDIO: CODEC (2/2)
Apple Inc.	DRAWING NUMBER 051-02221 · SIZE D
	REVISION 9.0.0
	BRANCH evt-1
	PAGE 48 OF 80
	SHEET 38 OF 51

NOTICE OF PROPRIETARY PROPERTY:
THE INFORMATION CONTAINED HEREIN IS THE PROPRIETARY PROPERTY OF APPLE INC.
THE POSESSOR AGREES TO THE FOLLOWING:
I TO MAINTAIN THIS DOCUMENT IN CONFIDENCE
II NOT TO REPRODUCE OR COPY IT
III NOT TO REVEAL OR PUBLISH IT IN WHOLE OR PART
IV ALL RIGHTS RESERVED

South Speaker Amplifier on MLB Bottom

SYNC_DATE=08/25/2015

PAGE TITLE
AUDIO: Speaker Amp Bottom

Apple Inc.

DRAWING NUMBER 051-02221
SIZE D
REVISION 9.0.0
BRANCH evt-1
PAGE 49 OF 80
SHEET 39 OF 51

NOTICE OF PROPRIETARY PROPERTY:
THE INFORMATION CONTAINED HEREIN IS THE PROPRIETARY PROPERTY OF APPLE INC.
THE POSESSOR AGREES TO THE FOLLOWING:
I TO MAINTAIN THIS DOCUMENT IN CONFIDENCE
II NOT TO REPRODUCE OR COPY IT
III NOT TO REVEAL OR PUBLISH IT IN WHOLE OR PART
IV ALL RIGHTS RESERVED

North Speaker Amplifier on MLB Bottom

SYNC_DATE=08/25/2015

PAGE TITLE
AUDIO: Speaker Amp Top

Apple Inc.

DRAWING NUMBER 051-02221
SIZE D
REVISION 9.0.0
BRANCH evt-1
PAGE 50 OF 80
SHEET 40 OF 51

NOTICE OF PROPRIETARY PROPERTY:
THE INFORMATION CONTAINED HEREIN IS THE PROPRIETARY PROPERTY OF APPLE INC.
THE POSESSOR AGREES TO THE FOLLOWING:
I TO MAINTAIN THIS DOCUMENT IN CONFIDENCE
II NOT TO REPRODUCE OR COPY IT
III NOT TO REVEAL OR PUBLISH IT IN WHOLE OR PART
IV ALL RIGHTS RESERVED

ARC DRIVER

APN: 338S00296
I2C ADDRESS: 1000 001x
0x82

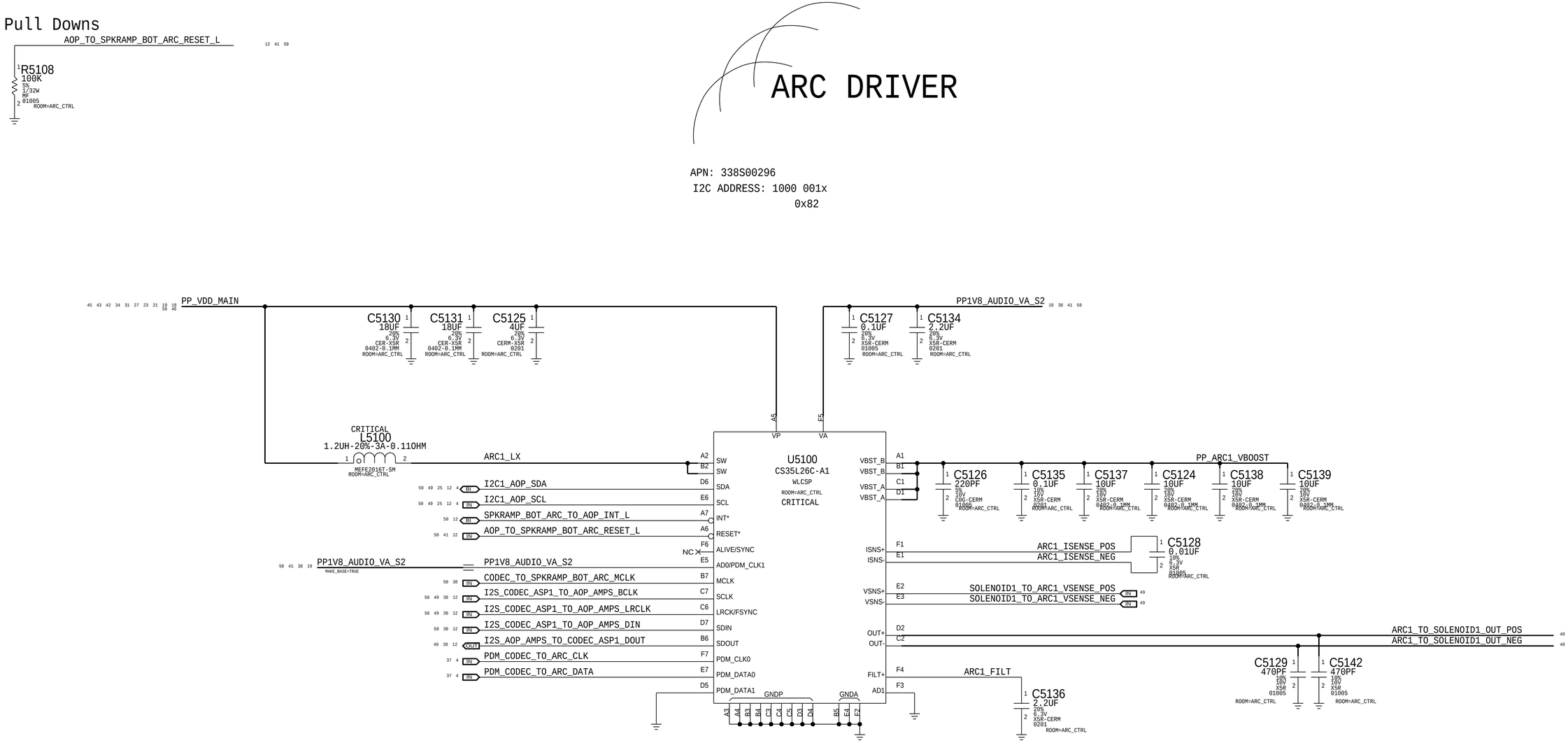

PAGE TITLE
ARC: Driver

Apple Inc.

DRAWING NUMBER 051-02221
SIZE D
REVISION 9.0.0
BRANCH evt-1
PAGE 51 OF 80
SHEET 41 OF 51

NOTICE OF PROPRIETARY PROPERTY:
THE INFORMATION CONTAINED HEREIN IS THE PROPRIETARY PROPERTY OF APPLE INC.
THE POSESSOR AGREES TO THE FOLLOWING:
I TO MAINTAIN THIS DOCUMENT IN CONFIDENCE
II NOT TO REPRODUCE OR COPY IT
III NOT TO REVEAL OR PUBLISH IT IN WHOLE OR PART
IV ALL RIGHTS RESERVED

Acorn PMU

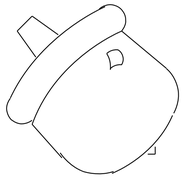

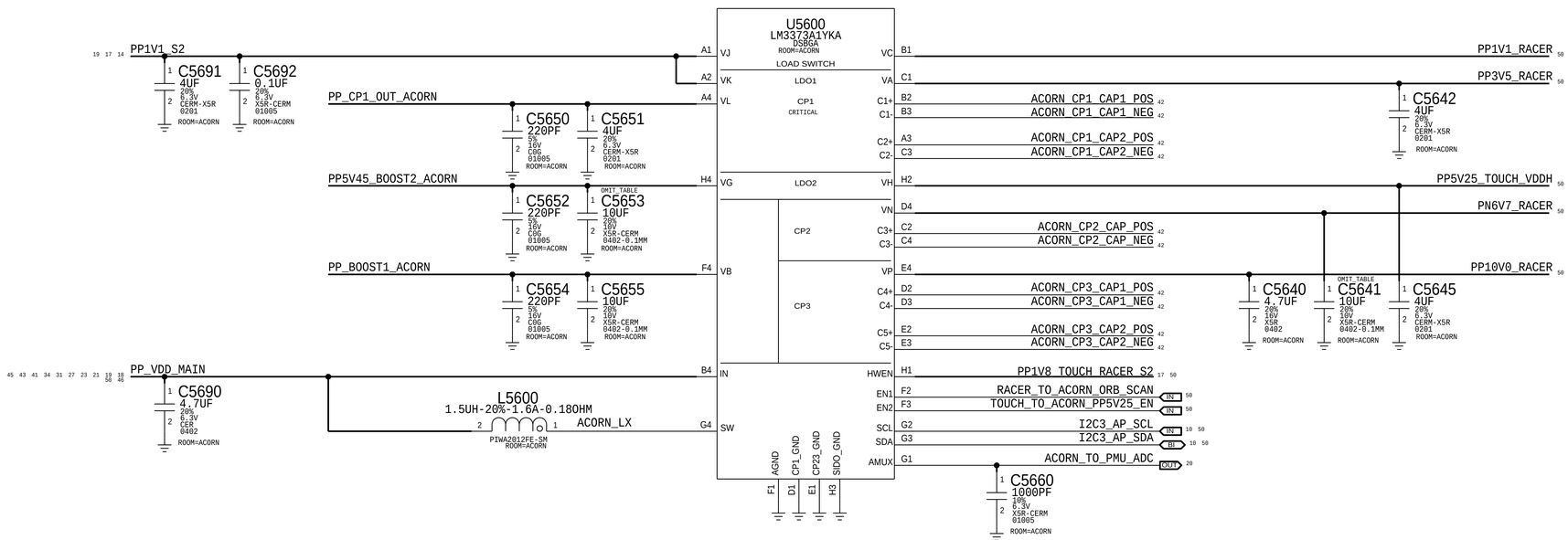

Charge Pump 1 Caps

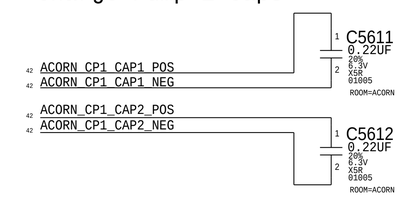

Charge Pump 2 Caps

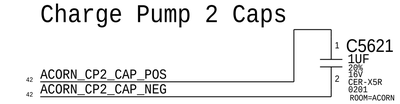

Charge Pump 3 Caps

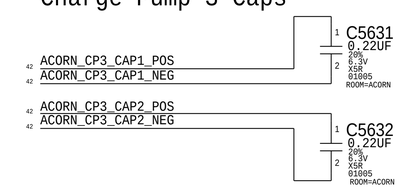

PAGE TITLE
CG: Power Supplies - Touch & Display

Apple Inc.

DRAWING NUMBER 051-02221 SIZE D
REVISION 9.0.0
BRANCH evt-1
PAGE 56 OF 80
SHEET 42 OF 51

NOTICE OF PROPRIETARY PROPERTY:
THE INFORMATION CONTAINED HEREIN IS THE PROPRIETARY PROPERTY OF APPLE INC.
THE POSESSOR AGREES TO THE FOLLOWING:
I TO MAINTAIN THIS DOCUMENT IN CONFIDENCE
II NOT TO REPRODUCE OR COPY IT
III NOT TO REVEAL OR PUBLISH IT IN WHOLE OR PART
IV ALL RIGHTS RESERVED

Display Control Signals

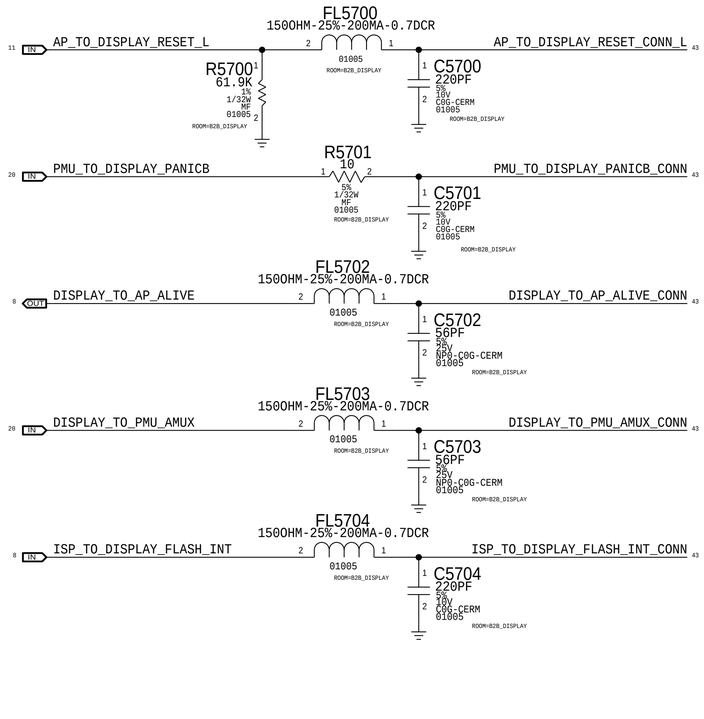

Display Flex Connector

Rcpt: 516S00210 <-- This one on MLB
Plug: 516S00211

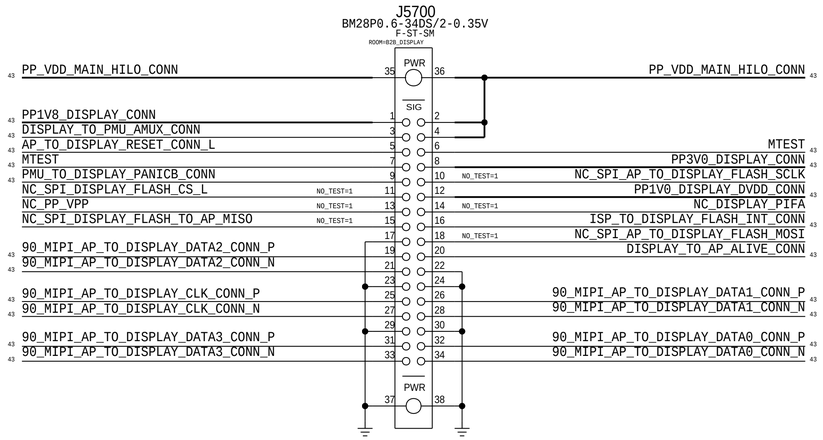

Display MIPI

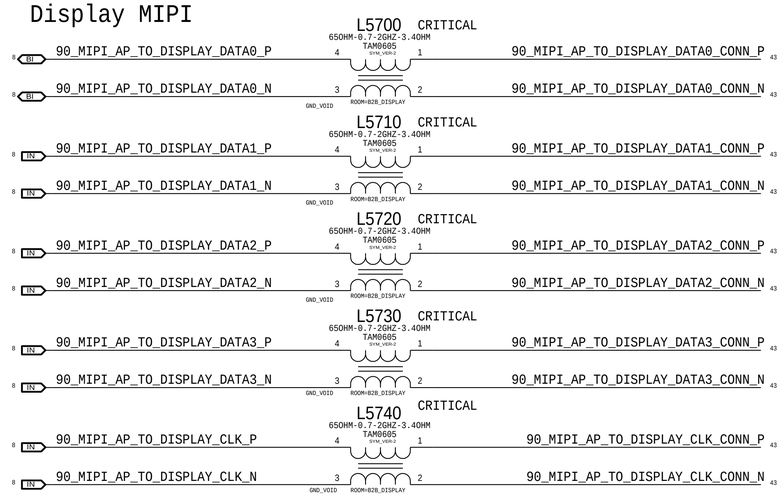

Display Power

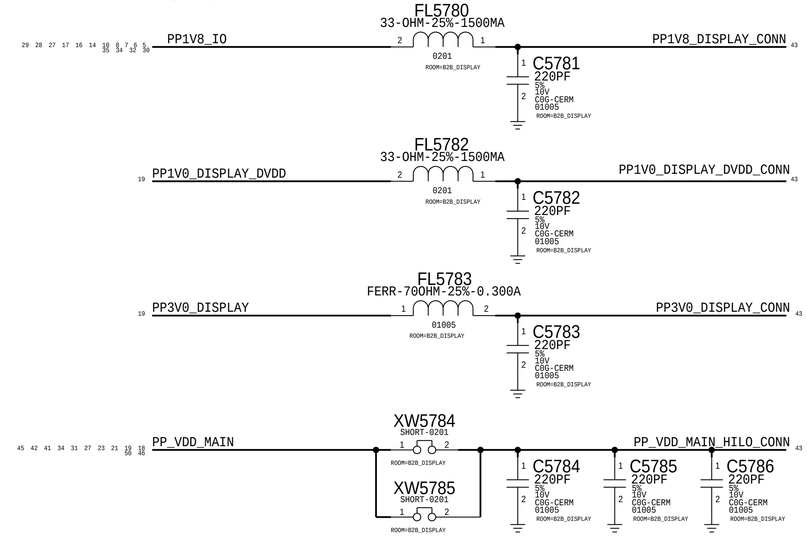

PAGE TITLE	CG: B2B Display
Apple Inc.	DRAWING NUMBER 051-02221 SIZE D
	REVISION 9.0.0
	BRANCH evt-1
	PAGE 57 OF 80
	SHEET 43 OF 51

NOTICE OF PROPRIETARY PROPERTY:
THE INFORMATION CONTAINED HEREIN IS THE PROPRIETARY PROPERTY OF APPLE INC.
THE POSESSOR AGREES TO THE FOLLOWING:
I TO MAINTAIN THIS DOCUMENT IN CONFIDENCE
II NOT TO REPRODUCE OR COPY IT
III NOT TO REVEAL OR PUBLISH IT IN WHOLE OR PART
IV ALL RIGHTS RESERVED

Orb + Touch Connector on MLB Bottom

SYNC_DATE=08/25/2015

PAGE TITLE
CG: B2B Orb & Touch

Apple Inc.

DRAWING NUMBER 051-02221
SIZE D
REVISION 9.0.0
BRANCH evt-1
PAGE 58 OF 80
SHEET 44 OF 51

NOTICE OF PROPRIETARY PROPERTY:
THE INFORMATION CONTAINED HEREIN IS THE PROPRIETARY PROPERTY OF APPLE INC.
THE POSESSOR AGREES TO THE FOLLOWING:
I TO MAINTAIN THIS DOCUMENT IN CONFIDENCE
II NOT TO REPRODUCE OR COPY IT
III NOT TO REVEAL OR PUBLISH IT IN WHOLE OR PART
IV ALL RIGHTS RESERVED

VDD_MAIN OV CUT-OFF CIRCUIT

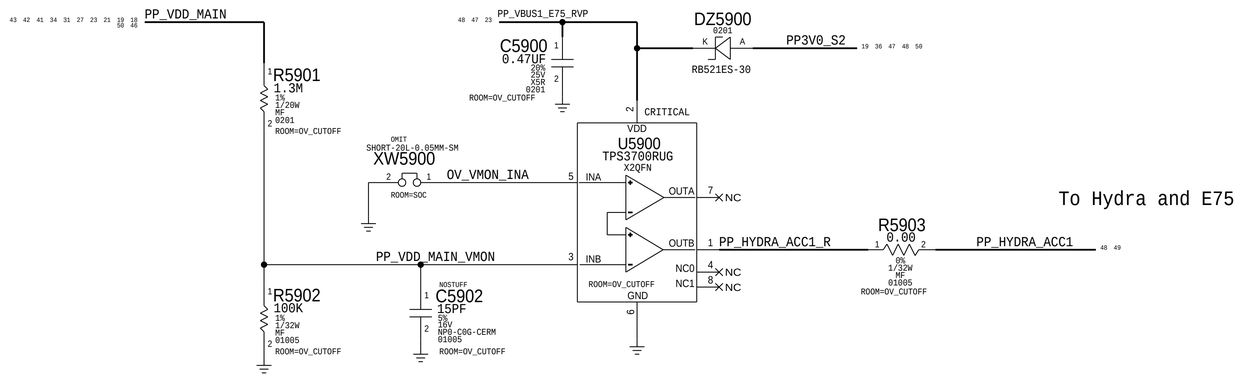

PAGE TITLE
I/O: Overvoltage Cut-Off Circuit

Apple Inc.

DRAWING NUMBER 051-02221 SIZE D
REVISION 9.0.0
BRANCH evt-1
PAGE 59 OF 80
SHEET 45 OF 51

NOTICE OF PROPRIETARY PROPERTY:
THE INFORMATION CONTAINED HEREIN IS THE PROPRIETARY PROPERTY OF APPLE INC.
THE POSESSOR AGREES TO THE FOLLOWING:
I TO MAINTAIN THIS DOCUMENT IN CONFIDENCE
II NOT TO REPRODUCE OR COPY IT
III NOT TO REVEAL OR PUBLISH IT IN WHOLE OR PART
IV ALL RIGHTS RESERVED

ACCESSORY BUCK

I2C ADDRESS: 0x52

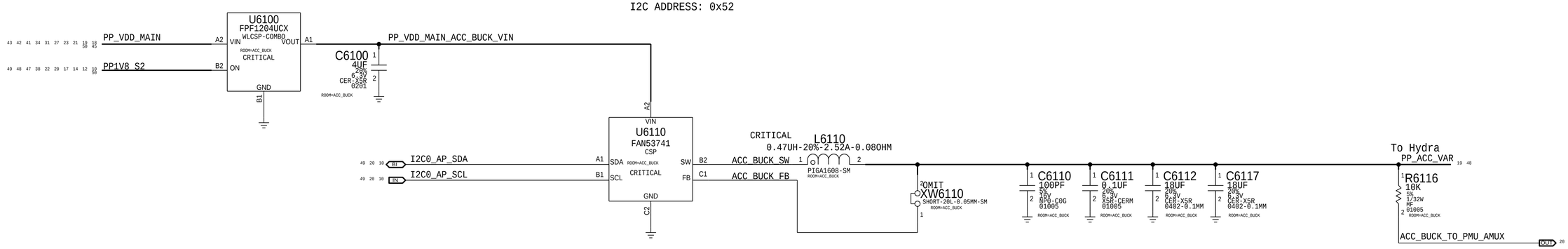

PAGE TITLE

I/O: Accessory Buck

Apple Inc.

DRAWING NUMBER 051-02221

SIZE D

REVISION 9.0.0

BRANCH evt-1

PAGE 61 OF 80

SHEET 46 OF 51

NOTICE OF PROPRIETARY PROPERTY:

THE INFORMATION CONTAINED HEREIN IS THE PROPRIETARY PROPERTY OF APPLE INC.
THE POSESSOR AGREES TO THE FOLLOWING:

I TO MAINTAIN THIS DOCUMENT IN CONFIDENCE

II NOT TO REPRODUCE OR COPY IT

III NOT TO REVEAL OR PUBLISH IT IN WHOLE OR PART

IV ALL RIGHTS RESERVED

USB-PD

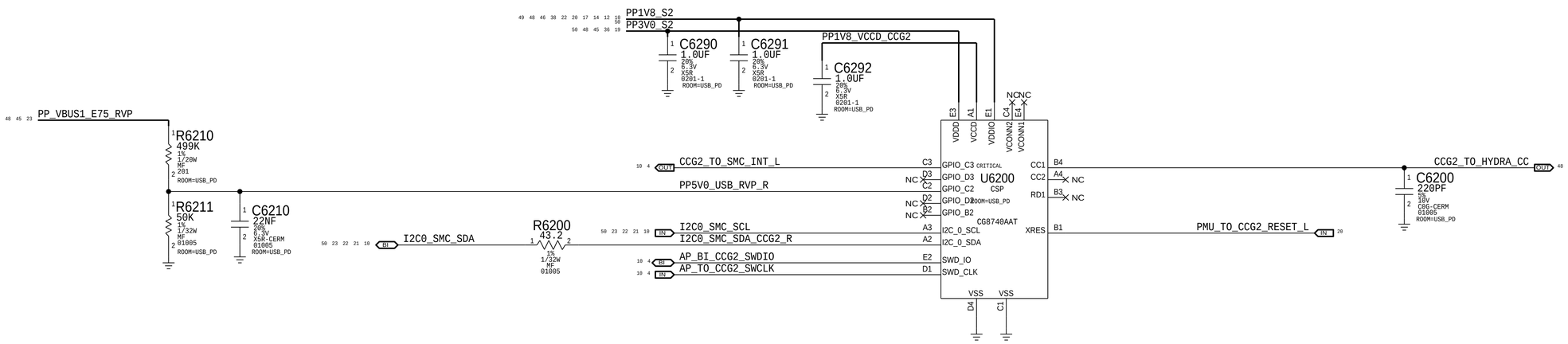

PAGE TITLE

I/O: USB PD

Apple Inc.

DRAWING NUMBER	051-02221
SIZE	D
REVISION	9.0.0
BRANCH	evt-1
PAGE	62 OF 80
SHEET	47 OF 51

NOTICE OF PROPRIETARY PROPERTY:

THE INFORMATION CONTAINED HEREIN IS THE PROPRIETARY PROPERTY OF APPLE INC.
THE POSESSOR AGREES TO THE FOLLOWING:

I TO MAINTAIN THIS DOCUMENT IN CONFIDENCE

II NOT TO REPRODUCE OR COPY IT

III NOT TO REVEAL OR PUBLISH IT IN WHOLE OR PART

IV ALL RIGHTS RESERVED

Hydra

I2C Address: 0011010X

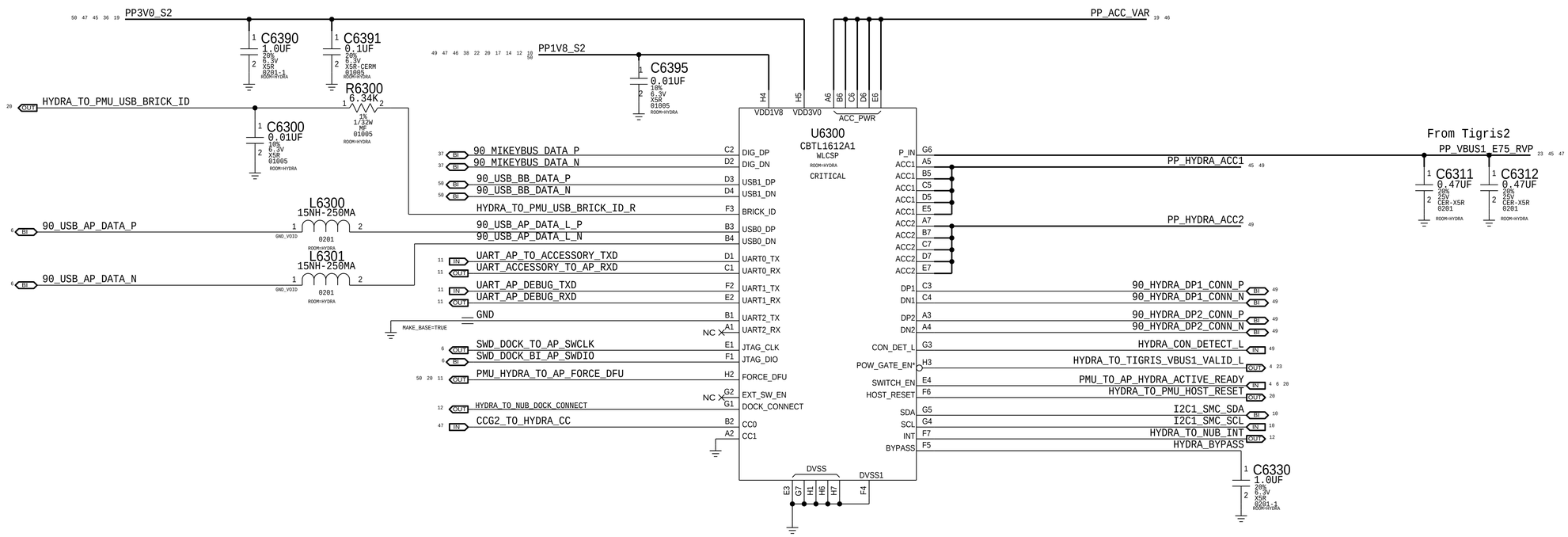

PAGE TITLE

I/O: Hydra

Apple Inc.

DRAWING NUMBER	051-02221
SIZE	D
REVISION	9.0.0
BRANCH	evt-1
PAGE	63 OF 80
SHEET	48 OF 51

NOTICE OF PROPRIETARY PROPERTY:

THE INFORMATION CONTAINED HEREIN IS THE PROPRIETARY PROPERTY OF APPLE INC.
THE POSESSOR AGREES TO THE FOLLOWING:
I TO MAINTAIN THIS DOCUMENT IN CONFIDENCE
II NOT TO REPRODUCE OR COPY IT
III NOT TO REVEAL OR PUBLISH IT IN WHOLE OR PART
IV ALL RIGHTS RESERVED

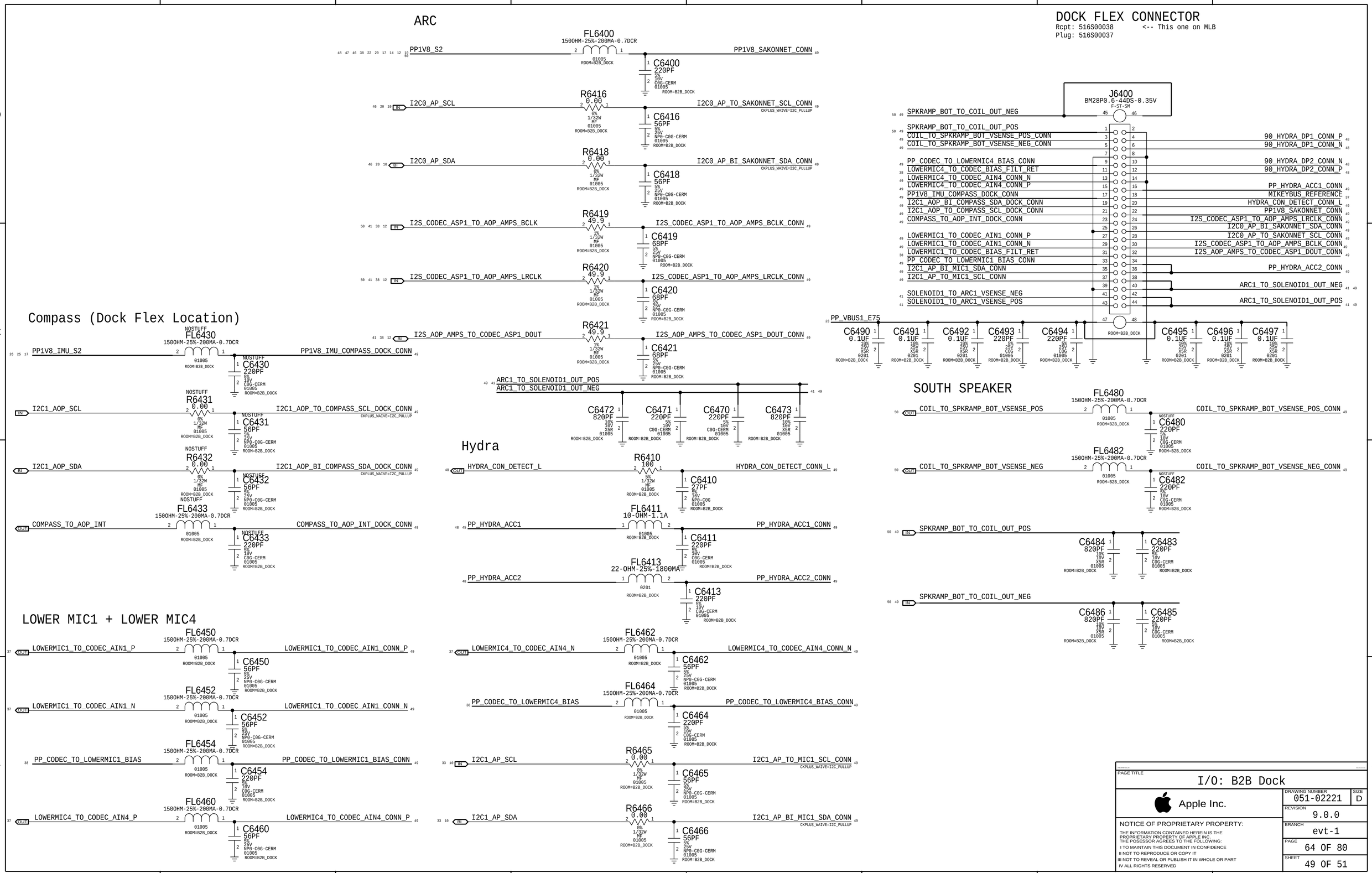

PAGE TITLE

I/O: B2B Dock

Apple Inc.

DRAWING NUMBER	051-02221
SIZE	D
REVISION	9.0.0
BRANCH	evt-1
PAGE	64 OF 80
SHEET	49 OF 51

NOTICE OF PROPRIETARY PROPERTY:
THE INFORMATION CONTAINED HEREIN IS THE PROPRIETARY PROPERTY OF APPLE INC.
THE POSESSOR AGREES TO THE FOLLOWING:
I TO MAINTAIN THIS DOCUMENT IN CONFIDENCE
II NOT TO REPRODUCE OR COPY IT
III NOT TO REVEAL OR PUBLISH IT IN WHOLE OR PART
IV ALL RIGHTS RESERVED

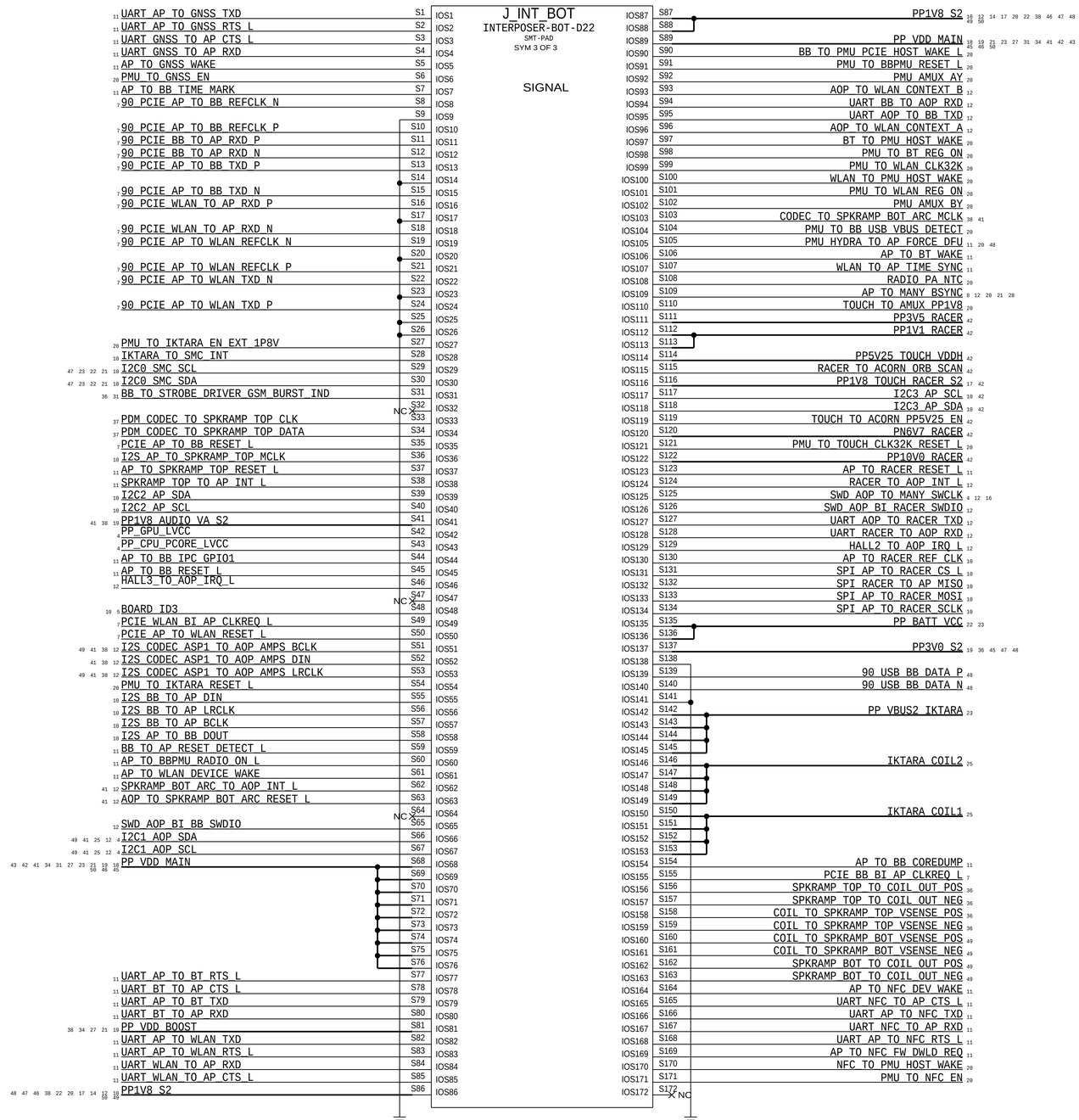

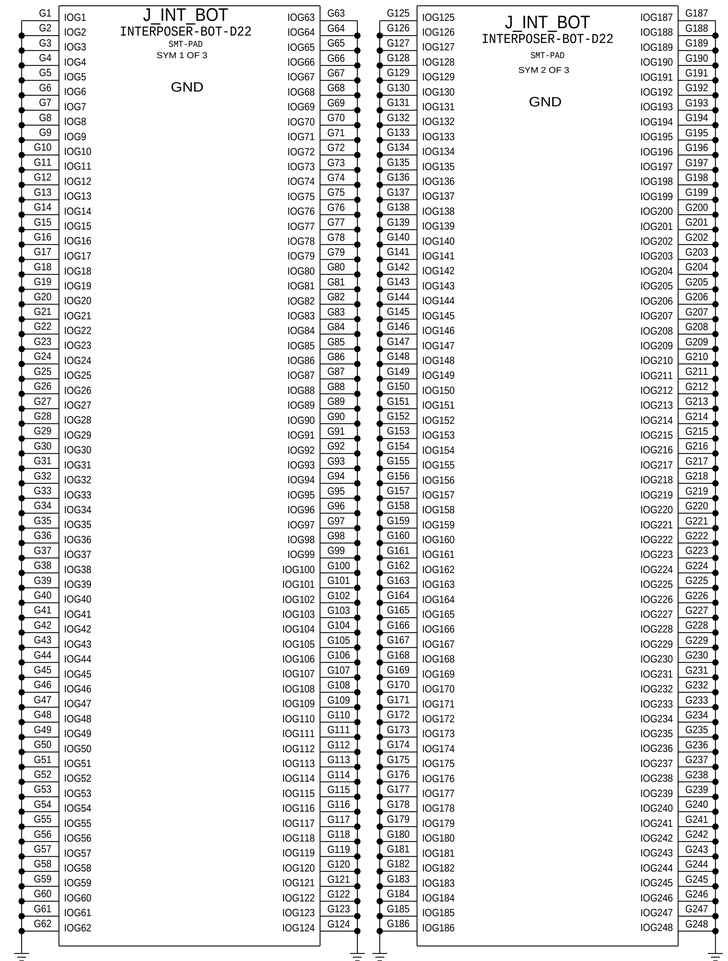

PAGE TITLE

I/O: Interposer (Bottom)

Apple Inc.

DRAWING NUMBER 051-02221 | SIZE D

REVISION 9.0.0

BRANCH evt-1

PAGE 65 OF 80

SHEET 50 OF 51

NOTICE OF PROPRIETARY PROPERTY:

THE INFORMATION CONTAINED HEREIN IS THE PROPRIETARY PROPERTY OF APPLE INC.
THE POSESSOR AGREES TO THE FOLLOWING:

I TO MAINTAIN THIS DOCUMENT IN CONFIDENCE

II NOT TO REPRODUCE OR COPY IT

III NOT TO REVEAL OR PUBLISH IT IN WHOLE OR PART

IV ALL RIGHTS RESERVED

Radios on MLB Bottom

SYNC_DATE=06/04/2015

PAGE TITLE
RADIOS

Apple Inc.

DRAWING NUMBER 051-02221
SIZE D
REVISION 9.0.0
BRANCH evt-1
PAGE 80 OF 80
SHEET 51 OF 51

NOTICE OF PROPRIETARY PROPERTY:
THE INFORMATION CONTAINED HEREIN IS THE PROPRIETARY PROPERTY OF APPLE INC.
THE POSESSOR AGREES TO THE FOLLOWING:
I TO MAINTAIN THIS DOCUMENT IN CONFIDENCE
II NOT TO REPRODUCE OR COPY IT
III NOT TO REVEAL OR PUBLISH IT IN WHOLE OR PART
IV ALL RIGHTS RESERVED

1. ALL RESISTANCE VALUES ARE IN OHMS, 0.1 WATT +/- 5%.
2. ALL CAPACITANCE VALUES ARE IN MICROFARADS.
3. ALL CRYSTALS & OSCILLATOR VALUES ARE IN HERTZ.

REV	ECN	DESCRIPTION OF REVISION	CK APPD / DATE
6	0008416016	ENGINEERING RELEASED	2017-04-06

X891 MLB Bottom: EVT

LAST_MODIFICATION=Wed Apr 5 18:45:28 2017

PAGE	CSA	CONTENTS	SYNC	DATE
1	1	TABLE OF CONTENTS		
2	2	SYSTEM: BOM Tables		11/03/2016
3	4	SYSTEM: Mechanical Components		11/03/2016
4	6	BOOTSTRAPPING		11/03/2016
5	7	SYSTEM: Testpoints (Bottom)	test_mlb	11/09/2016
6	34	SYSTEM POWER: Iktara	test_mlb	11/09/2016
7	49	AUDIO: Speaker Amp Bottom	test_mlb	11/09/2016
8	50	AUDIO: Speaker Amp Top	test_mlb	11/09/2016
9	55	HALL EFFECT	test_mlb	03/23/2017
10	58	CG: B2B Luna & Touch	test_mlb	11/09/2016
11	66	I/O: Interposer (Top)	test_mlb	11/10/2016
12	80	RADIOS	test_mlb	08/19/2016
13	1	page1		
14	2	BOM_OMIT_TABLE		
15	3	PMIC: BUCKS & LDOS		
16	4	PMIC: CLOCKS & CONTROL		
17	5	BB: POWER		
18	6	BB: CONTROL & HS PERIPHERALS		
19	7	BB: GPIOS & QLINK		
20	8	XCVR		
21	9	XCVR		
22	10	QPOET MODULE		
23	11	LB PAD		
24	12	HB PAD		
25	13	UHB PAD		
26	14	2G PA		
27	15	LB DSM		
28	16	HB DSM		
29	17	COUPLER2		
30	18	GNSS		
31	19	METROCIRC		
32	20	LOWER ANTENNA		
33	21	UPPER ANTENNA		
34	22	SIM, EUICC, DEBUG CONN	SIM TRAY	07/05/2016
35	23	TEST POINTS	PROBE POINTS	07/06/2016
36	24	RFFE TO GPO TRANSLATOR		
37	1	page1		
38	75	NFC		
39	1	SymbolPorts		
40	4	Guinness	WIFI	01/30/2014
41	5	WiFiANTFeeds		

PAGE	CSA	CONTENTS	SYNC	DATE

BOM:639-03222 (ROW)
BOM:639-03410 (JPN)
MCO:056-04079

PART#	QTY	DESCRIPTION	REFERENCE DESIGNATOR(S)	CRITICAL	BOM OPTION
051-02222	1	SCH,MLB_BOT,X891	SCH	NO	COMMON
820-00864	1	PCB,MLB_BOT,X891	PCB	NO	COMMON

Sub Designs

SOURCE PROJECT	SUB-DESIGN NAME	VERSION	HARD/ SOFT	SYNC_DATE/TIME
D22	RADIO_MLB	0.149.0	S	2017_04_05_18:45:19
D22	NFC_MLB	0.22.0	S	2017_03_22_22:10:24
D22	WIFI_MLB	0.20.0	S	2017_04_04_08:01:02

TABLE OF CONTENTS

DRAWING TITLE: SCH,MLB,BOT,X891

Apple Inc.

DRAWING NUMBER: 051-02222 SIZE: D
REVISION: 6.0.0
BRANCH: evt-1
PAGE: 1 OF 80
SHEET: 1 OF 41

NOTICE OF PROPRIETARY PROPERTY:
THE INFORMATION CONTAINED HEREIN IS THE PROPRIETARY PROPERTY OF APPLE INC.
THE POSESSOR AGREES TO THE FOLLOWING:
I TO MAINTAIN THIS DOCUMENT IN CONFIDENCE
II NOT TO REPRODUCE OR COPY IT
III NOT TO REVEAL OR PUBLISH IT IN WHOLE OR PART
IV ALL RIGHTS RESERVED

EEEE Codes

PART#	QTY	DESCRIPTION	REFERENCE DESIGNATOR(S)	CRITICAL	BOM OPTION
825-7691	1	EEEE FOR (MLB_BOT, 639-03410, JPN)	EEEE_HP27	NO	JPN
825-7691	1	EEEE FOR (MLB_BOT, 639-03222, ROW)	EEEE_HLJ9	NO	ROW

Global Capacitors

PART NUMBER	ALTERNATE FOR PART NUMBER	BOM OPTION	REF DES	COMMENTS:
138S00148	138S00149	BOM_TABLE_ALTS	ALL	0402-3T,10.5uF@1V, Kyocera
138S00150	138S00149	BOM_TABLE_ALTS	ALL	0402-3T,10.5uF@1V, SEMCO
138S00151	138S00149	BOM_TABLE_ALTS	ALL	0402-3T,10.5uF@1V, TY

CRITICAL PART#	COMMENT
138S00149	0402-3T,10.5uF@1V

PART NUMBER	ALTERNATE FOR PART NUMBER	BOM OPTION	REF DES	COMMENTS:
138S00143	138S00144	BOM_TABLE_ALTS	ALL	0402,16uF@1V, Kyocera
138S00163	138S00144	BOM_TABLE_ALTS	ALL	0402,16uF@1V, Taiyo

CRITICAL PART#	COMMENT
138S00144	0402,16uF@1V

PART NUMBER	ALTERNATE FOR PART NUMBER	BOM OPTION	REF DES	COMMENTS:
138S00138	138S00139	BOM_TABLE_ALTS	ALL	0201,3uF@1V, Kyocera
138S00164	138S00139	BOM_TABLE_ALTS	ALL	0201,3uF@1V, Taiyo

CRITICAL PART#	COMMENT
138S00139	0201,3uF@1V

PART NUMBER	ALTERNATE FOR PART NUMBER	BOM OPTION	REF DES	COMMENTS:
138S00145	138S00146	BOM_TABLE_ALTS	ALL	0402,5.1uF@3V, Kyocera
138S00165	138S00146	BOM_TABLE_ALTS	ALL	0402,5.1uF@3V, Taiyo

CRITICAL PART#	COMMENT
138S00146	0402,5.1uF@3V

PART NUMBER	ALTERNATE FOR PART NUMBER	BOM OPTION	REF DES	COMMENTS:
138S00140	138S00141	BOM_TABLE_ALTS	ALL	0201,1.1uF@3V, Kyocera
138S00142	138S00141	BOM_TABLE_ALTS	ALL	0201,1.1uF@3V, SEMCO
138S00166	138S00141	BOM_TABLE_ALTS	ALL	0201,1.1uF@3V, Taiyo

CRITICAL PART#	COMMENT
138S00141	0201,1.1uF@3V

Global Ferrites

PART NUMBER	ALTERNATE FOR PART NUMBER	BOM OPTION	REF DES	COMMENTS:
152S00558	152S00557	BOM_TABLE_ALTS	ALL	IND,MLD,0.47UH,20%,2.5A,80MΩ,1608
155S00194	155S0610	BOM_TABLE_ALTS	ALL	FERR BD,150 OHM,25%,200MA,0.7 DCR,01005
155S00200	155S0610	BOM_TABLE_ALTS	ALL	FERR BD,150 OHM,25%,200MA,0.7 DCR,01005

CRITICAL PART#	COMMENT
152S00557	IND,MLD,0.47UH,20%,2.5A,80MΩ,1608
155S0610	FERR BD,150 OHM,25%,200MA,0.7 DCR,01005

Global R/C Alternates

PART NUMBER	ALTERNATE FOR PART NUMBER	BOM OPTION	REF DES	COMMENTS:
138S0648	138S0652	BOM_TABLE_ALTS	ALL	CAP,X5R,4.7UF,6.3V,0.65MM,0402,TAIYO
138S00024	138S0986	BOM_TABLE_ALTS	ALL	CAP,CER,3-TERM,7.5UF,20%,4V,0402,TAIYO/TDK
138S0706	138S0739	BOM_TABLE_ALTS	ALL	CAP,CER,1UF,20%,10V,X5R,0201,MURATA
138S0945	138S0739	BOM_TABLE_ALTS	ALL	CAP,CER,1UF,20%,10V,X5R,0201,KYOCERA
138S0739	138S0706	BOM_TABLE_ALTS	ALL	CAP,CER,X5R,0.22UF,20%,6.3V,20%
132S0436	132S0400	BOM_TABLE_ALTS	ALL	CAP,CER,X5R,0.22UF,20%,6.3V,01005
138S00049	138S0831	BOM_TABLE_ALTS	ALL	CAP,CER,X5R,2.2UF,20%,6.3V,0201

CRITICAL PART#	COMMENT
138S0652	CAP,X5R,4.7UF,6.3V,0.65MM,0402,TAIYO
138S0986	CAP,CER,3-TERM,7.5UF,20%,4V,0402,TAIYO/TDK
138S0739	CAP,CER,1UF,20%,10V,X5R,0201,MURATA
138S0706	CAP,CER,X5R,0.22UF,20%,6.3V,20%
132S0400	CAP,CER,X5R,0.22UF,20%,6.3V,01005
138S0831	CAP,CER,X5R,2.2UF,20%,6.3V,0201

Global Inductors

PART NUMBER	ALTERNATE FOR PART NUMBER	BOM OPTION	REF DES	COMMENTS:
152S00653	152S00651	BOM_TABLE_ALTS	ALL	IND,1.2UH,3A,2016,0.65Z
152S00654	152S00652	BOM_TABLE_ALTS	ALL	IND,1.2UH,3A,2016,0.8Z

CRITICAL PART#	COMMENT
152S00651	IND,1.2UH,3A,2016,0.65Z
152S00652	IND,1.2UH,3A,2016,0.8Z

Multi-Vendor Criticals

CRITICAL PART#	COMMENT
138S0979	CAP,CER,X5R,10UF,20%,10V,0402,H=0.65MM
138S0683	CAP,CER,X5R,1UF,10%,25V,0402
132S0663	CAP,CER,X5R,1UF,10%,25V,0402
132S0288	CAP,CER,X5R,0.1UF,10%,16V,0201
132S0275	CAP,CER,X5R,470PF,10%,10V,01005
132S0245	CAP,CER,X5R,0.01UF,10%,6.3V,01005

CRITICAL PART#	COMMENT
132S00008	CAP,CER,0.1UF,10%,50V,X7R,0402
131S0804	CAP,CER,27PF,5%,C0G,25V,0201
131S0307	CAP,CER,NP0/C0G,100PF,5%,16V,01005
131S00053	CAP,CER,C0G,220PF,5%,10V,01005
117S0055	RES,MF,1/20W,2M OHM,5,0201,SMD
107S0257	THERMISTOR,NTC,10K OHM,1%,B=3435,01005

Iktara

PART#	QTY	DESCRIPTION	REFERENCE DESIGNATOR(S)	CRITICAL	BOM OPTION
132S00021	8	CAP,CER,0.082UF,10%,50V,X7R,0402	C3451,C3452,C3453,C3454,C3461,C3462,C3463,C3464	NO	COMMON
132S0423	2	CAP,CER,0.022UF,50V,X7R,10%,0402	C3455,C3465	CRITICAL	COMMON
132S0423	2	CAP,CER,0.022UF,50V,X7R,10%,0402	C3456,C3466	CRITICAL	NOSTUFF

PART NUMBER	ALTERNATE FOR PART NUMBER	BOM OPTION	REF DES	COMMENTS:
685-00183	685-00182	BOM_TABLE_ALTS	SUBBOM_DS	SUBBOM,MLB,BOT,DIODES,ONSEMI,X891

PART#	QTY	DESCRIPTION	REFERENCE DESIGNATOR(S)	CRITICAL	BOM OPTION
685-00182	1	SUBBOM,MLB,BOT,DIODES,DIODES,X891	SUBBOM_DS	CRITICAL	COMMON
371S00133	4	DIODES,SHOTTKY DIODE,30V,2A,0603	D3400,D3401,D3402,D3403	CRITICAL	DIODES_DS
371S00132	4	ONSEMI,SHOTTKY DIODE,30V,2A,0603	D3400,D3401,D3402,D3403	CRITICAL	ONSEMI_DS

Soft-Term Cap Sub BOMs

PART#	QTY	DESCRIPTION	REFERENCE DESIGNATOR(S)	CRITICAL	BOM OPTION
685-00157	1	SUBBOM,MLB,BOT,CAP,TYPICAL,X891	SUBBOM_CAP	CRITICAL	COMMON

Touch/Luna B2B

PART#	QTY	DESCRIPTION	REFERENCE DESIGNATOR(S)	CRITICAL	BOM OPTION
138S00159	1	CAP,SOFT-TERM,2.2UF,6.3V,0201,KYOCERA	C5890	CRITICAL	SOFT_CAP
138S0831	1	CAP,TYPICAL,2.2UF,6.3V,0201,MURATA	C5890	CRITICAL	TYPICAL_CAP

PART NUMBER	ALTERNATE FOR PART NUMBER	BOM OPTION	REF DES	COMMENTS:
685-00158	685-00157	BOM_TABLE_ALTS	SUBBOM_CAP	SUBBOM,MLB,BOT,CAP,SOFT,X891

SYNC_MASTER= SYNC_DATE=11/03/2016

PAGE TITLE

SYSTEM: BOM Tables

Apple Inc.

DRAWING NUMBER 051-02222 SIZE D

REVISION 6.0.0

BRANCH evt-1

PAGE 2 OF 80

SHEET 2 OF 41

NOTICE OF PROPRIETARY PROPERTY:

THE INFORMATION CONTAINED HEREIN IS THE PROPRIETARY PROPERTY OF APPLE INC.
THE POSESSOR AGREES TO THE FOLLOWING:

I TO MAINTAIN THIS DOCUMENT IN CONFIDENCE

II NOT TO REPRODUCE OR COPY IT

III NOT TO REVEAL OR PUBLISH IT IN WHOLE OR PART

IV ALL RIGHTS RESERVED

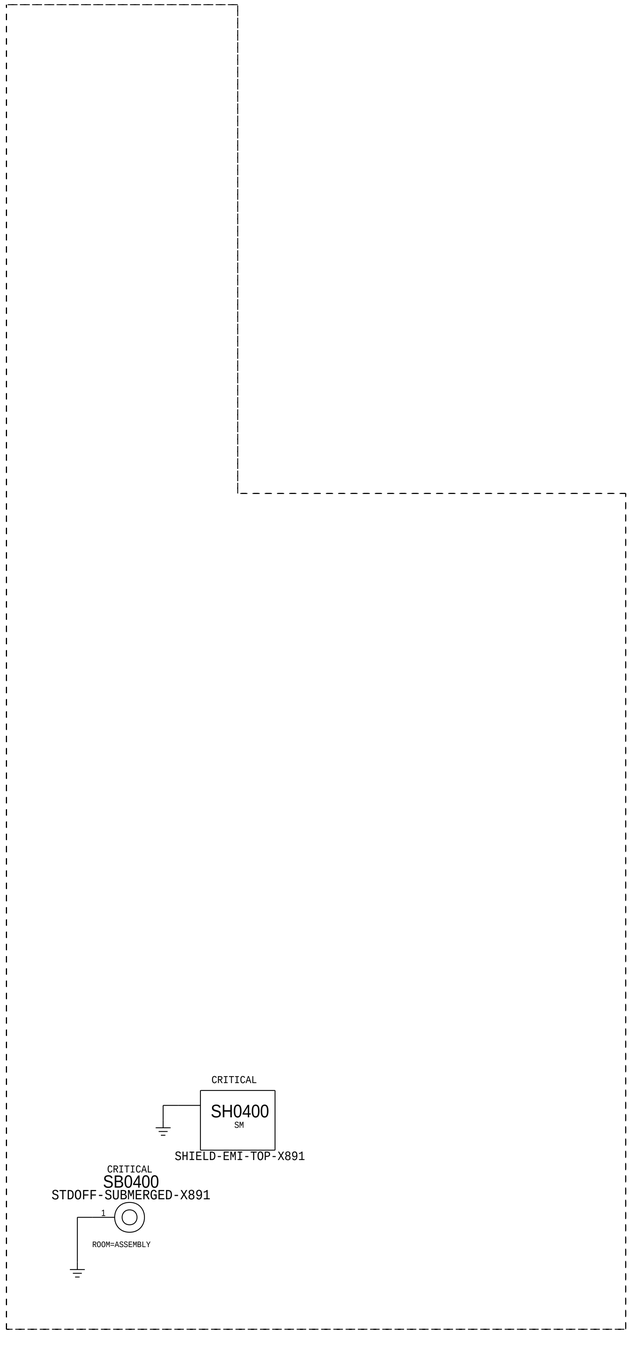

FIDUCIALS

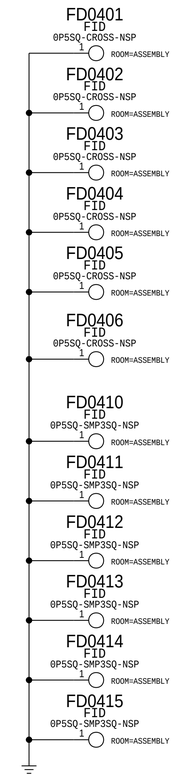

SYNC_DATE=11/03/2016

PAGE TITLE

SYSTEM: Mechanical Components

Apple Inc.

DRAWING NUMBER	051-02222
SIZE	D
REVISION	6.0.0
BRANCH	evt-1
PAGE	4 OF 80
SHEET	3 OF 41

NOTICE OF PROPRIETARY PROPERTY:

THE INFORMATION CONTAINED HEREIN IS THE PROPRIETARY PROPERTY OF APPLE INC.
THE POSESSOR AGREES TO THE FOLLOWING:
I TO MAINTAIN THIS DOCUMENT IN CONFIDENCE
II NOT TO REPRODUCE OR COPY IT
III NOT TO REVEAL OR PUBLISH IT IN WHOLE OR PART
IV ALL RIGHTS RESERVED

BOOTSTRAPPING:BOARD ID[3]

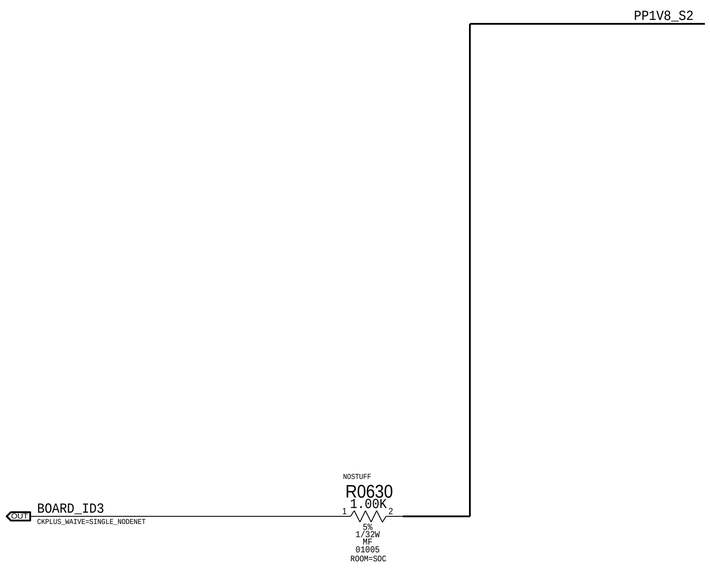

D22 Selected (BOARD_ID3) ->

Board Rev[3:0]				
Float=Low I PU=High				
	3	2	1	0
	Build Major		Build Minor	
Proto 1	1	1	1	1
Proto 2	1	1	1	0
Proto 3	1	1	0	1
(Spare)	1	1	0	0
EVT	1	0	1	1
(Spare)	1	0	1	0
Carrier	0	1	1	1
(Spare)	0	1	1	0
DVT	0	0	1	1
(Spare)	0	0	1	0
(Spare)	0	0	0	1
PVT	0	0	0	0

Board ID[4:0]					
Float=Low I PU=High					
	4	3	2	1	0
	X	Baseband	Form Factor		MLB/Dev
D20 MLB	0	0	0	1	0
D20 Dev	0	0	0	1	1
D21 MLB	0	0	1	0	0
D21 Dev	0	0	1	0	1
D22 MLB	0	0	1	1	0
D22 Dev	0	0	1	1	1
D201 MLB	0	1	0	1	0
D201 Dev	0	1	0	1	1
D211 MLB	0	1	1	0	0
D211 Dev	0	1	1	0	1
D221 MLB	0	1	1	1	0
D221 Dev	0	1	1	1	1

Boot Config[2:0]			
Float=Low I PU=High			
	2	1	0
SPI0	0	0	0
SPI0 Test Mode	0	0	1
SPI0 NAND	0	1	0
SPI0 NAND Test	0	1	1
Slow SPI0 Test	1	1	0

SYNC_DATE=11/03/2016

PAGE TITLE
BOOTSTRAPPING

Apple Inc.

DRAWING NUMBER 051-02222
SIZE D
REVISION 6.0.0
BRANCH evt-1
PAGE 6 OF 80
SHEET 4 OF 41

NOTICE OF PROPRIETARY PROPERTY:
THE INFORMATION CONTAINED HEREIN IS THE PROPRIETARY PROPERTY OF APPLE INC.
THE POSESSOR AGREES TO THE FOLLOWING:
I TO MAINTAIN THIS DOCUMENT IN CONFIDENCE
II NOT TO REPRODUCE OR COPY IT
III NOT TO REVEAL OR PUBLISH IT IN WHOLE OR PART
IV ALL RIGHTS RESERVED

Test Points

PP_VDD_MAIN — TP0700, TP0701, TP0702, TP0703 — VDD_MAIN

PP_BATT_VCC — TP0515, TP0522 — VBATT

TP0705, TP0706, TP0707, TP0708, TP0709, TP0710

AMUX

PMU_AMUX_AY — TP0713 — ANALOG MUX A OUTPUT

PMU_AMUX_BY — TP0715 — ANALOG MUX B OUTPUT

DFU

PMU_HYDRA_TO_AP_FORCE_DFU — TP0714 — FORCE DFU

LVCC

PP_GPU_LVCC — TP0720

PP_CPU_PCORE_LVCC — TP0721

COIL

IKTARA_COIL1 — TP0730

IKTARA_COIL2 — TP0731

PP1V8_TOUCH_RACER_S2 — TP0750

PP5V25_TOUCH_VDDH — TP0751

PP3V5_RACER — TP0752

PN6V7_RACER — TP0753

PP10V0_RACER — TP0754

PP1V1_RACER — TP0755

TOUCH_TO_ACORN_PP5V25_EN — TP0756

TOUCH_TO_AMUX_PP1V8 — TP0757

PMU_TO_TOUCH_CLK32K_RESET_L — TP0758

AP_TO_MANY_BSYNC — TP0759

HALL2_TO_AOP_IRQ_L — TP0760

AP_TO_RACER_RESET_L — TP0761

UART_RACER_TO_AOP_RXD — TP0762

RACER_TO_AOP_INT_L — TP0763

UART_AOP_TO_RACER_TXD — TP0764

RACER_TO_ACORN_ORB_SCAN — TP0766

SPI_AP_TO_RACER_CS_L — TP0767

SPI_AP_TO_RACER_MOSI — TP0768

I2C3_AP_SDA — TP0771

I2C3_AP_SCL — TP0772

Probe Points

GND — TP0780, TP0790 — Stockholm GND TP

Iktara Debug

PMU_TO_IKTARA_EN_EXT_1P8V — PP0700

IKTARA_ANA1 — PP0701

IKTARA_GPIO3 — PP0702

IKTARA_GPIO4 — PP0703

IKTARA_TO_SMC_INT — PP0704

SYNC_MASTER=test_mlb SYNC_DATE=11/09/2016

PAGE TITLE: SYSTEM: Testpoints (Bottom)

Apple Inc.

DRAWING NUMBER: 051-02222 SIZE: D

REVISION: 6.0.0

BRANCH: evt-1

PAGE: 7 OF 80

SHEET: 5 OF 41

NOTICE OF PROPRIETARY PROPERTY:
THE INFORMATION CONTAINED HEREIN IS THE PROPRIETARY PROPERTY OF APPLE INC.
THE POSESSOR AGREES TO THE FOLLOWING:
I TO MAINTAIN THIS DOCUMENT IN CONFIDENCE
II NOT TO REPRODUCE OR COPY IT
III NOT TO REVEAL OR PUBLISH IT IN WHOLE OR PART
IV ALL RIGHTS RESERVED

Iktara

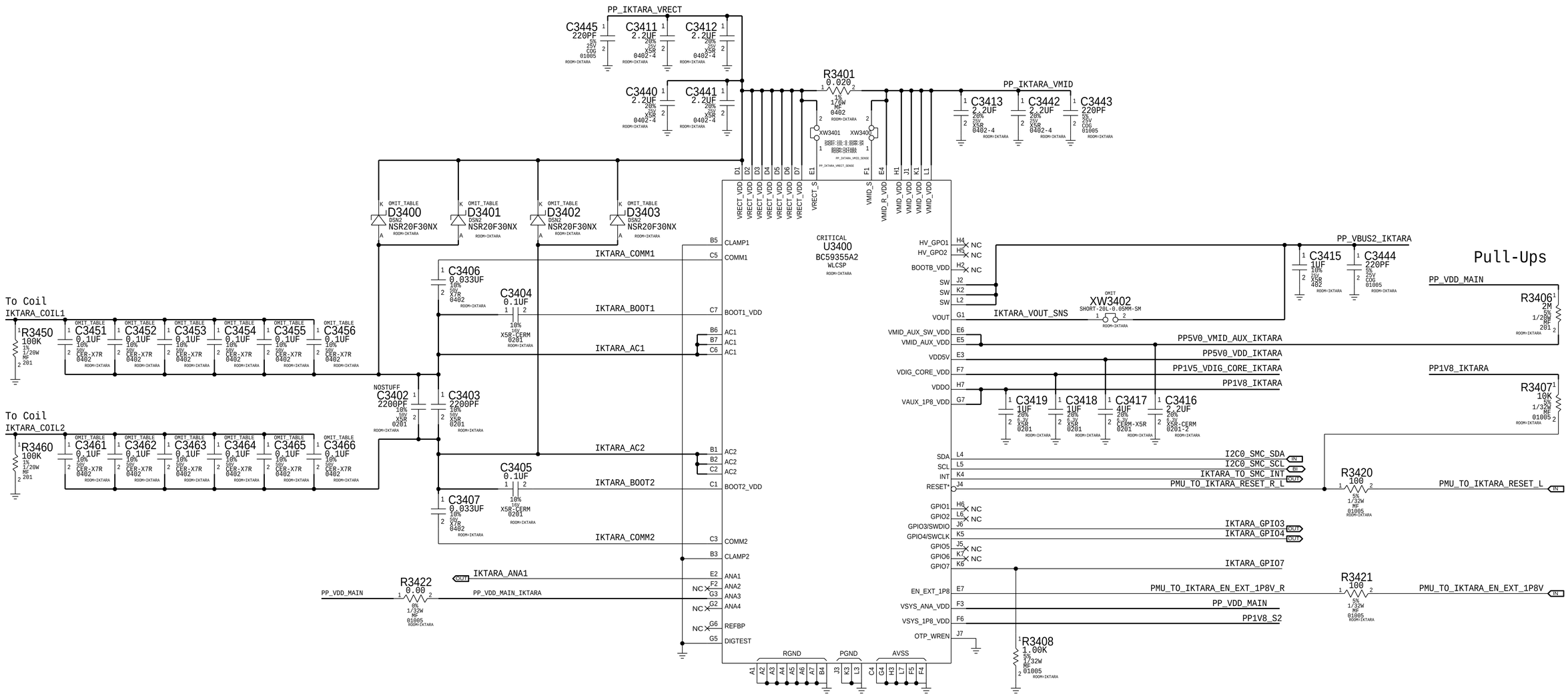

PAGE TITLE

SYSTEM POWER: Iktara

Apple Inc.

DRAWING NUMBER 051-02222

SIZE D

REVISION 6.0.0

BRANCH evt-1

PAGE 34 OF 80

SHEET 6 OF 41

NOTICE OF PROPRIETARY PROPERTY:

THE INFORMATION CONTAINED HEREIN IS THE PROPRIETARY PROPERTY OF APPLE INC.
THE POSESSOR AGREES TO THE FOLLOWING:
I TO MAINTAIN THIS DOCUMENT IN CONFIDENCE
II NOT TO REPRODUCE OR COPY IT
III NOT TO REVEAL OR PUBLISH IT IN WHOLE OR PART
IV ALL RIGHTS RESERVED

South Speaker Amplifier

APN: 338S00295

I2C ADDRESS: 1000 000x
0x80

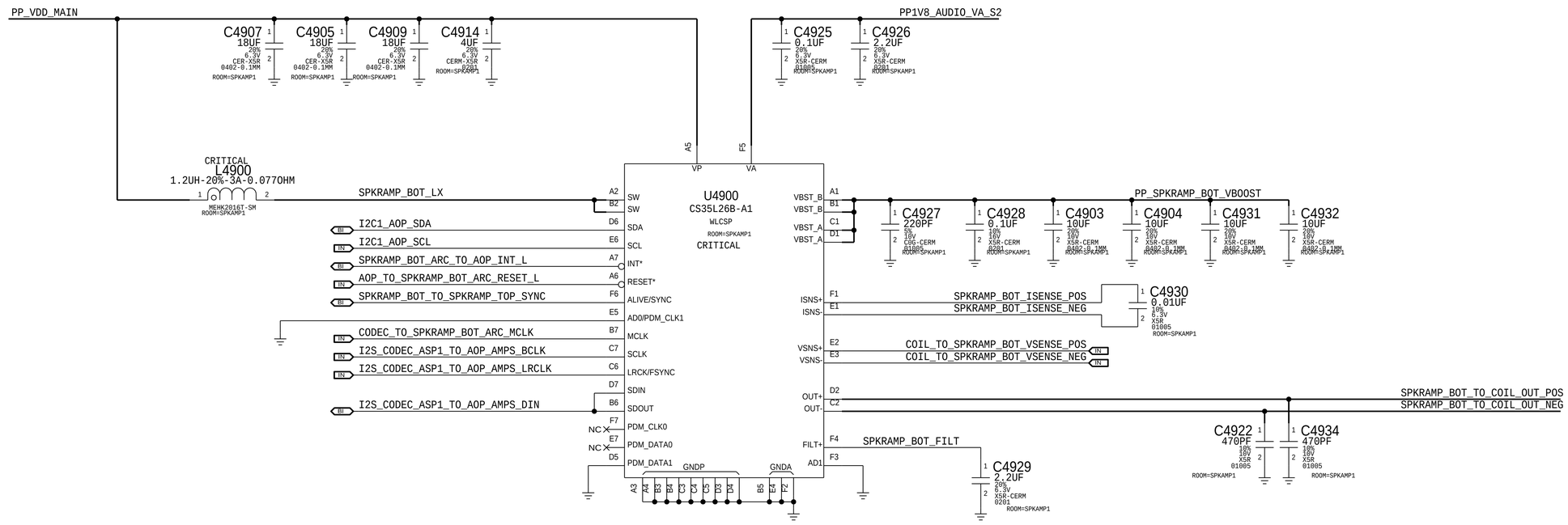

PAGE TITLE	AUDIO: Speaker Amp Bottom
Apple Inc.	DRAWING NUMBER 051-02222 SIZE D
	REVISION 6.0.0
	BRANCH evt-1
	PAGE 49 OF 80
	SHEET 7 OF 41

NOTICE OF PROPRIETARY PROPERTY:
THE INFORMATION CONTAINED HEREIN IS THE PROPRIETARY PROPERTY OF APPLE INC.
THE POSESSOR AGREES TO THE FOLLOWING:
I TO MAINTAIN THIS DOCUMENT IN CONFIDENCE
II NOT TO REPRODUCE OR COPY IT
III NOT TO REVEAL OR PUBLISH IT IN WHOLE OR PART
IV ALL RIGHTS RESERVED

Pull Downs

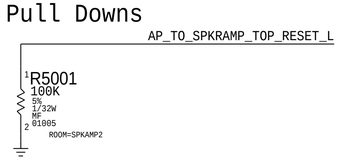

North Speaker Amplifier

APN: 338S00295

I2C ADDRESS: 1000 000x

0x80

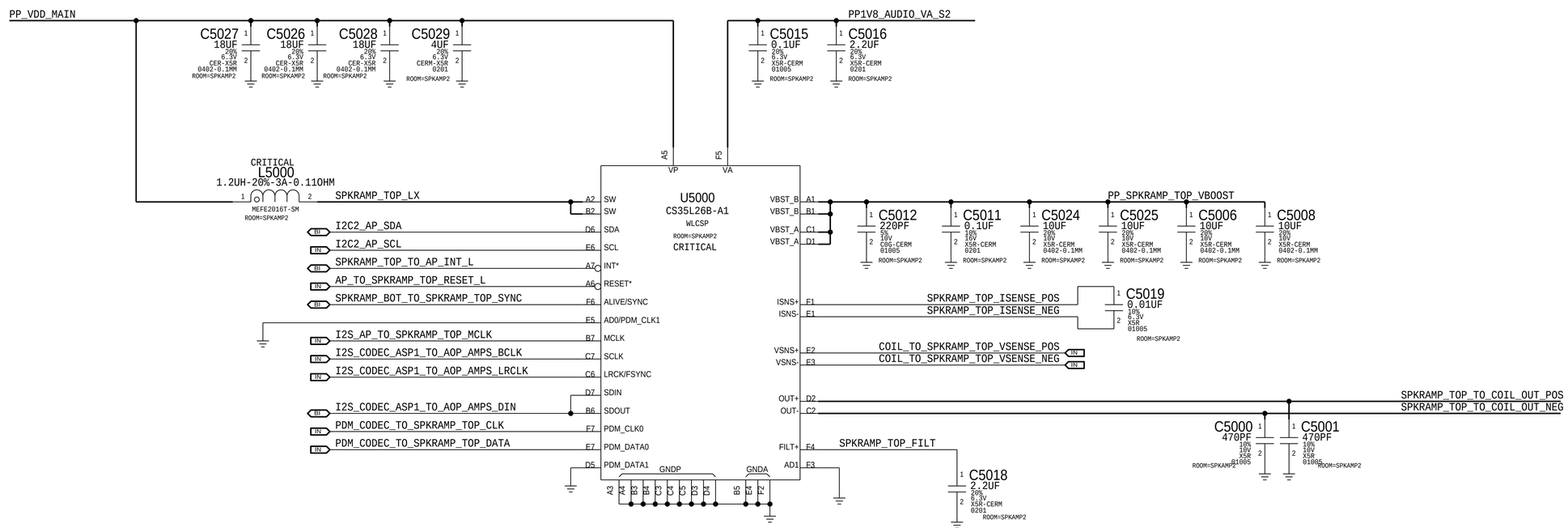

SYNC_MASTER=test_a13 SYNC_DATE=11/09/2018

PAGE TITLE

AUDIO: Speaker Amp Top

Apple Inc.

DRAWING NUMBER	051-02222
SIZE	D
REVISION	6.0.0
BRANCH	evt-1
PAGE	50 OF 80
SHEET	8 OF 41

NOTICE OF PROPRIETARY PROPERTY:

THE INFORMATION CONTAINED HEREIN IS THE PROPRIETARY PROPERTY OF APPLE INC.
THE POSESSOR AGREES TO THE FOLLOWING:

I TO MAINTAIN THIS DOCUMENT IN CONFIDENCE

II NOT TO REPRODUCE OR COPY IT

III NOT TO REVEAL OR PUBLISH IT IN WHOLE OR PART

IV ALL RIGHTS RESERVED

Hall Effect

APN:353S3697

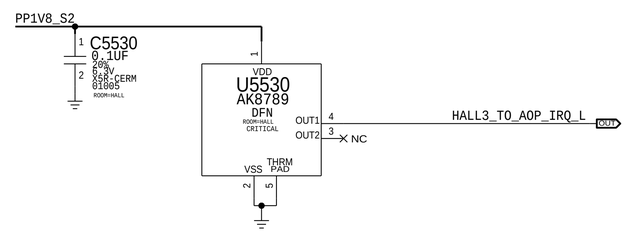

PAGE TITLE

HALL EFFECT

Apple Inc.

DRAWING NUMBER 051-02222

SIZE D

REVISION 6.0.0

BRANCH evt-1

PAGE 55 OF 80

SHEET 9 OF 41

NOTICE OF PROPRIETARY PROPERTY:

THE INFORMATION CONTAINED HEREIN IS THE PROPRIETARY PROPERTY OF APPLE INC.
THE POSESSOR AGREES TO THE FOLLOWING:

I TO MAINTAIN THIS DOCUMENT IN CONFIDENCE

II NOT TO REPRODUCE OR COPY IT

III NOT TO REVEAL OR PUBLISH IT IN WHOLE OR PART

IV ALL RIGHTS RESERVED

Racer I/O

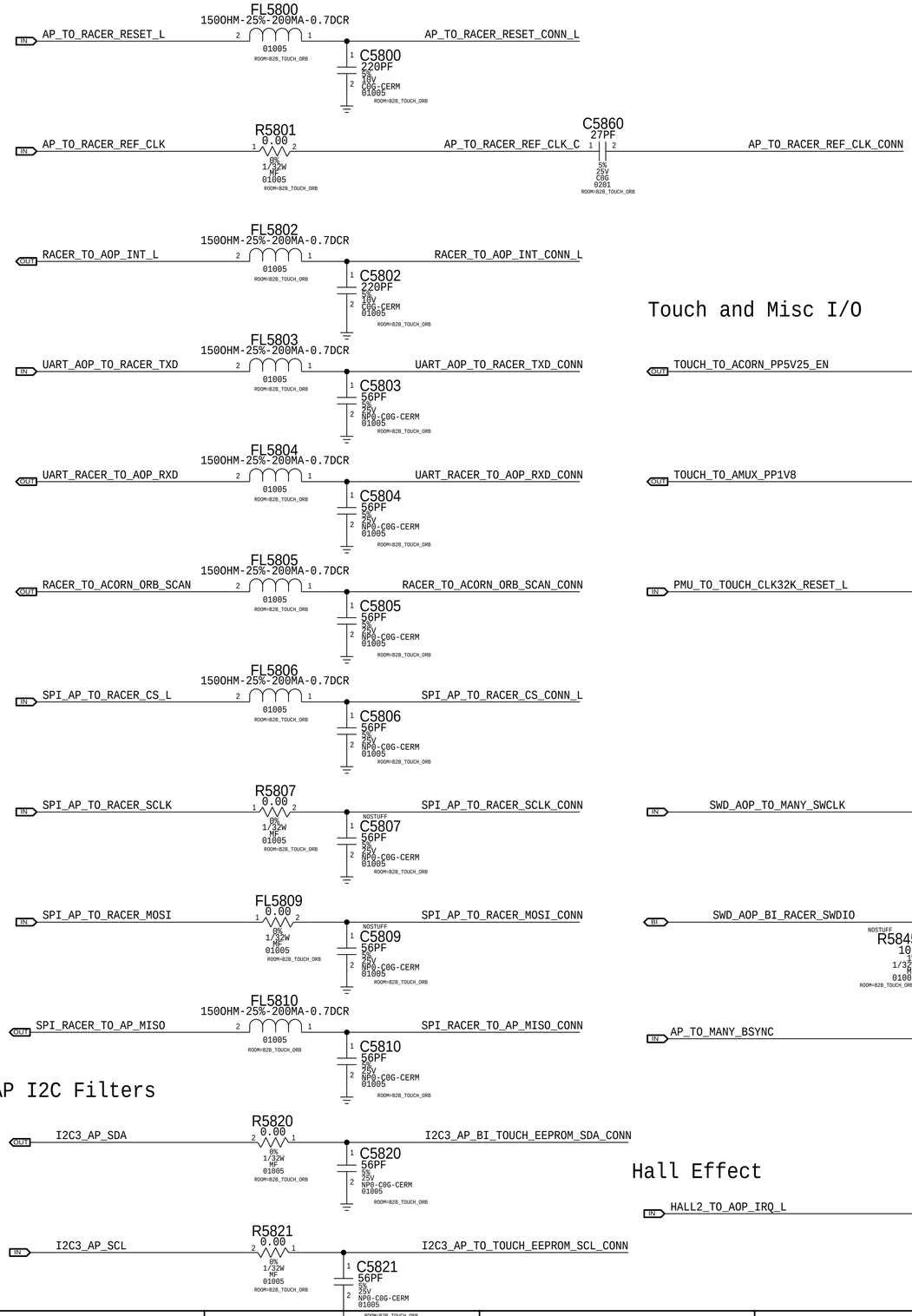

AP I2C Filters

Touch and Misc I/O

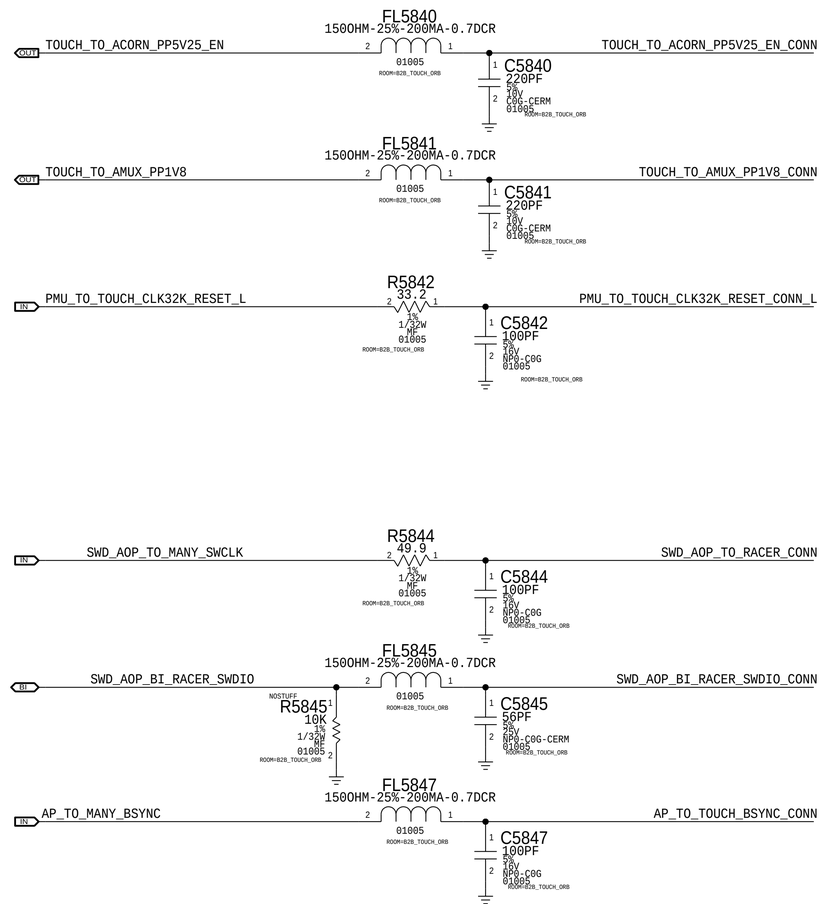

Hall Effect

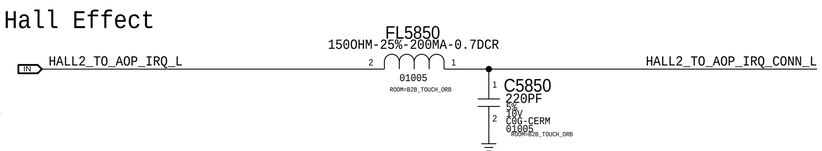

Luna + Touch Connector

Rcpt: 516S00325 <-- This one on MLB
Plug: 516S00326

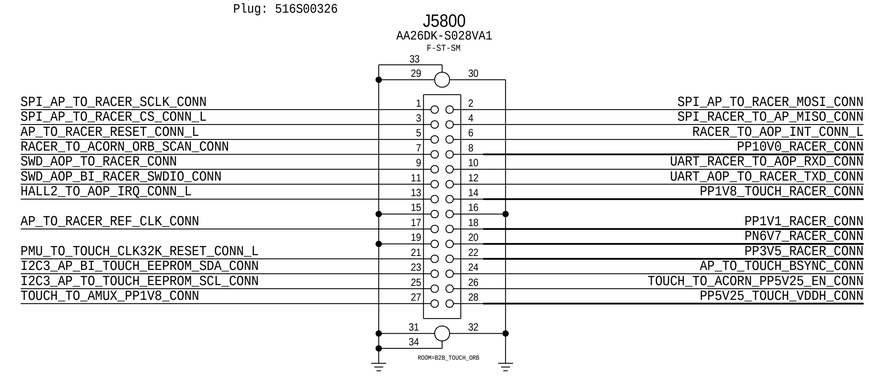

Touch And Racer Power

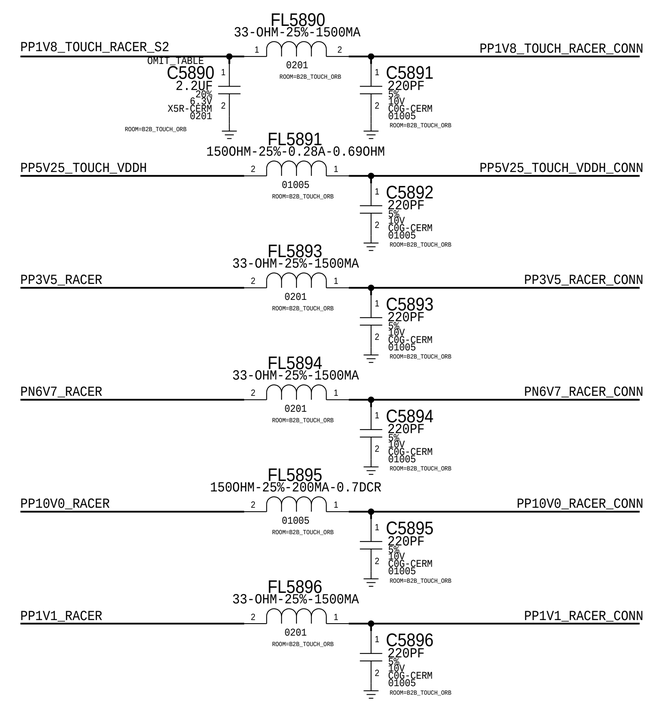

PAGE TITLE	CG: B2B Luna & Touch
Apple Inc.	DRAWING NUMBER 051-02222
	SIZE D
	REVISION 6.0.0
	BRANCH evt-1
	PAGE 58 OF 80
	SHEET 10 OF 41

NOTICE OF PROPRIETARY PROPERTY:
THE INFORMATION CONTAINED HEREIN IS THE PROPRIETARY PROPERTY OF APPLE INC.
THE POSESSOR AGREES TO THE FOLLOWING:
I TO MAINTAIN THIS DOCUMENT IN CONFIDENCE
II NOT TO REPRODUCE OR COPY IT
III NOT TO REVEAL OR PUBLISH IT IN WHOLE OR PART
IV ALL RIGHTS RESERVED

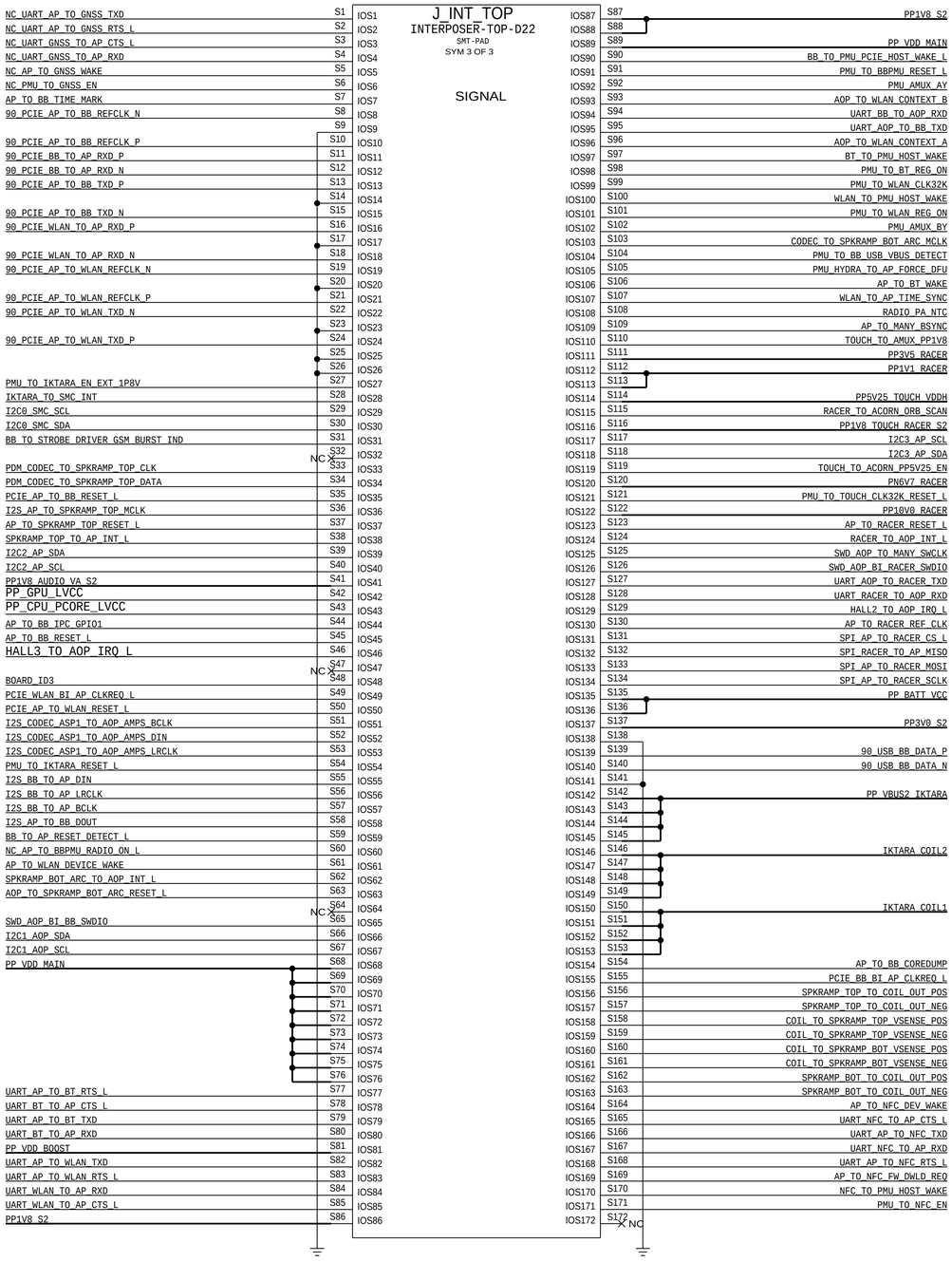

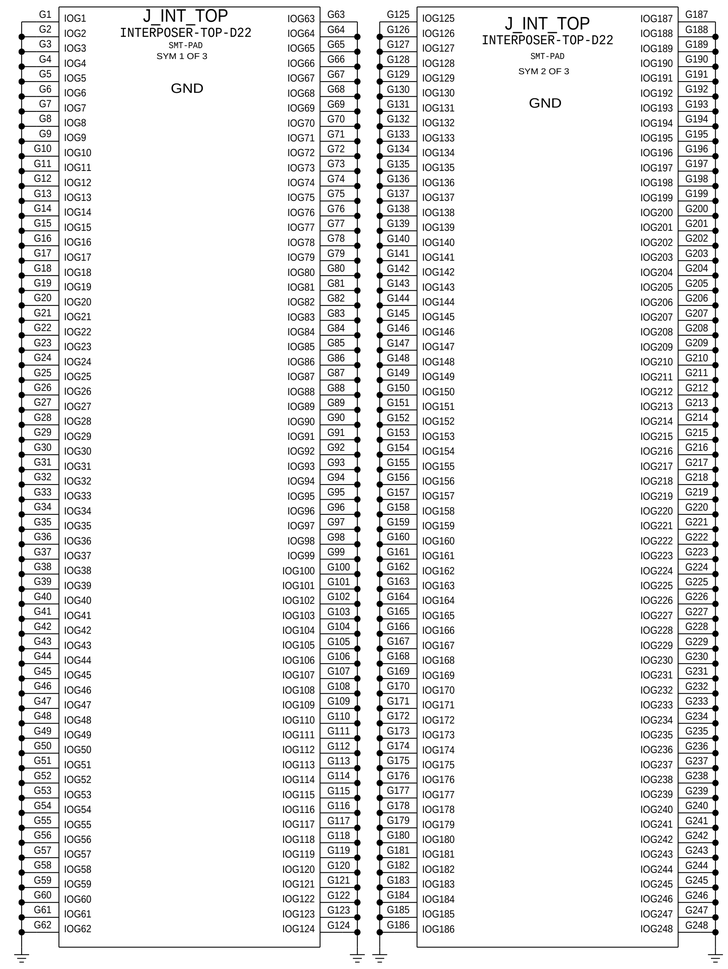

SYNC_MASTER=test_mlb SYNC_DATE=11/10/2016

PAGE TITLE

I/O: Interposer (Top)

Apple Inc.

DRAWING NUMBER	051-02222
SIZE	D
REVISION	6.0.0
BRANCH	evt-1
PAGE	66 OF 80
SHEET	11 OF 41

NOTICE OF PROPRIETARY PROPERTY:

THE INFORMATION CONTAINED HEREIN IS THE PROPRIETARY PROPERTY OF APPLE INC.
THE POSESSOR AGREES TO THE FOLLOWING:
I TO MAINTAIN THIS DOCUMENT IN CONFIDENCE
II NOT TO REPRODUCE OR COPY IT
III NOT TO REVEAL OR PUBLISH IT IN WHOLE OR PART
IV ALL RIGHTS RESERVED

Wifi/BT

I90
SUBDESIGN_SUFFIX=W

90_PCIE_AP_TO_WLAN_REFCLK_P	90_PCIE_AP_TO_WLAN_REFCLK_P	PP_VDD_MAIN	PP_VDD_MAIN
90_PCIE_AP_TO_WLAN_REFCLK_N	90_PCIE_AP_TO_WLAN_REFCLK_N	PP1V8_SDRAM	PP1V8_S2
90_PCIE_AP_TO_WLAN_TXD_P	90_PCIE_AP_TO_WLAN_TX_P		
90_PCIE_AP_TO_WLAN_TXD_N	90_PCIE_AP_TO_WLAN_TX_N		
90_PCIE_WLAN_TO_AP_RXD_P	90_PCIE_WLAN_TO_AP_RX_P		
90_PCIE_WLAN_TO_AP_RXD_N	90_PCIE_WLAN_TO_AP_RX_N		
PCIE_WLAN_BI_AP_CLKREQ_L	PCIE_AP_BI_WLAN_CLKREQ_L		
PCIE_AP_TO_WLAN_RESET_L	PCIE_AP_TO_WLAN_PERST_L		
WLAN_TO_PMU_HOST_WAKE	PCIE_WLAN_TO_PMU_WAKE	UART_BB_TO_WLAN_COEX	UART_BB_TO_WLAN_COEX
		UART_WLAN_TO_BB_COEX	UART_WLAN_TO_BB_COEX
AOP_TO_WLAN_CONTEXT_A	AOP_TO_WLAN_CONTEXT_A		
AOP_TO_WLAN_CONTEXT_B	AOP_TO_WLAN_CONTEXT_B		
AP_TO_BT_WAKE	AP_TO_BT_WAKE		
AP_TO_WLAN_DEVICE_WAKE	AP_TO_WLAN_DEV_WAKE		
		BT_TO_PMU_HOST_WAKE	BT_TO_PMU_HOST_WAKE
		UART_BT_TO_AP_CTS_L	UART_BT_TO_AP_CTS_L
		UART_BT_TO_AP_RXD	UART_BT_TO_AP_RXD
		UART_AP_TO_BT_RTS_L	UART_AP_TO_BT_RTS_L
		UART_AP_TO_BT_TXD	UART_AP_TO_BT_TXD
PMU_TO_BT_REG_ON	PMU_TO_BT_REG_ON		
PMU_TO_WLAN_CLK32K	PMU_TO_WLAN_32K		
PMU_TO_WLAN_REG_ON	PMU_TO_WLAN_REG_ON		
UART_WLAN_TO_AP_CTS_L	UART_WLAN_TO_AP_CTS_L		
UART_WLAN_TO_AP_RXD	UART_WLAN_TO_AP_RXD		
UART_AP_TO_WLAN_RTS_L	UART_AP_TO_WLAN_RTS_L		
UART_AP_TO_WLAN_TXD	UART_AP_TO_WLAN_TXD		
WLAN_TO_AP_TIME_SYNC	WLAN_TIME_SYNC		
		50_UAT_WLAN_2G_SOUTH	50_UAT_WLAN_2G_SOUTH
		50_UAT_WLAN_5G_SOUTH	50_UAT_WLAN_5G_SOUTH
		50_LAT_WLAN_MLC	50_LAT_WLAN_MLC

WIFI_MLB

RADIO PA NTC

C3043 100PF 5% 16V NP0-C0G 01005 ROOM=PMU

I115 R3043 10KOHM-1% 01005 ROOM=PMU

RADIO_PA_NTC
PA_NTC_RETURN

OMIT XW3043 SHORT-20L-0.05MM-SM ROOM=PMU

NFC

SUBDESIGN_SUFFIX=S

PP_VDD_MAIN	PP_VDD_MAIN
PP1V8_S2	PP1V8_SDRAM
PMU_TO_NFC_EN	PMU_TO_NFC_EN
BB_TO_NFC_CLK	BB_TO_NFC_CLK
NFC_TO_BB_CLK_REQ	NFC_TO_BB_CLK_REQ
AP_TO_NFC_FW_DWLD_REQ	AP_TO_NFC_FW_DWLD
AP_TO_NFC_DEV_WAKE	AP_TO_NFC_DEV_WAKE
NFC_TO_PMU_HOST_WAKE	NFC_TO_PMU_HOST_WAKE
	NC × NFC_DWP_TX_TP
UART_AP_TO_NFC_TXD	UART_AP_TO_NFC_TXD
UART_NFC_TO_AP_RXD	UART_NFC_TO_AP_RXD
UART_AP_TO_NFC_RTS_L	UART_AP_TO_NFC_RTS_L
UART_NFC_TO_AP_CTS_L	UART_NFC_TO_AP_CTS_L
NFC_SWP1	NFC_SWP1

nfc_mlb

Cellular

SUBDESIGN_SUFFIX=E
I85

PP_VDD_MAIN	PP_VDD_MAIN	
PP3V0_S2	PP3V0_S2	
PP1V8_S2	PP1V8_SDRAM	
PP_VDD_BOOST	PP_VDD_BOOST_RF	
NC_AP_TO_BBPMU_RADIO_ON_L	NC_AP_TO_BBPMU_RADIO_ON_L (I118, MAKE_BASE=TRUE)	
PMU_TO_BBPMU_RESET_L	PMU_TO_BBPMU_RESET_L	
AP_TO_BB_RESET_L	AP_TO_BB_RESET_L	
	BB_TO_AP_RESET_ACT_L	
BB_TO_AP_RESET_DETECT_L	BB_TO_AP_RESET_DETECT_L	radio_mlb
BB_TO_STROBE_DRIVER_GSM_BURST_IND	BB_TO_AP_GSM_TXBURST	
AP_TO_BB_TIME_MARK	AP_TO_BB_TIME_MARK	
AP_TO_BB_COREDUMP	AP_TO_BB_COREDUMP_TRIG	
AP_TO_MANY_BSYNC	TOUCH_TO_BBPMU_FORCE_PWM	
AP_TO_BB_IPC_GPIO1	AP_TO_BB_IPC_GPIO	
	AP_TO_BB_IPC_GPIO2	
90_PCIE_AP_TO_BB_REFCLK_P	100_PCIE_AP_TO_BB_REFCLK_P	
90_PCIE_AP_TO_BB_REFCLK_N	100_PCIE_AP_TO_BB_REFCLK_N	
90_PCIE_AP_TO_BB_TXD_P	100_PCIE_AP_TO_BB_TX_P	
90_PCIE_AP_TO_BB_TXD_N	100_PCIE_AP_TO_BB_TX_N	
90_PCIE_BB_TO_AP_RXD_P	100_PCIE_BB_TO_AP_RX_P	
90_PCIE_BB_TO_AP_RXD_N	100_PCIE_BB_TO_AP_RX_N	
PCIE_AP_TO_BB_RESET_L	PCIE_AP_TO_BB_PERST_L	
PCIE_BB_BI_AP_CLKREQ_L	PCIE_AP_BI_BB_CLKREQ_L	
BB_TO_PMU_PCIE_HOST_WAKE_L	PCIE_BB_TO_PMU_WAKE_L	
	UART_AP_TO_BB_TXD	
	UART_BB_TO_AP_RXD	
UART_AOP_TO_BB_TXD	UART_AOP_TO_BB_TXD	
UART_BB_TO_AOP_RXD	UART_BB_TO_AOP_RXD	
	UART_AOP_TO_GNSS_TXD	
	UART_GNSS_TO_AOP_RXD	
I2S_BB_TO_AP_BCLK	I2S_BB_TO_AP_BCLK	
I2S_BB_TO_AP_LRCLK	I2S_BB_TO_AP_LRCLK	
I2S_AP_TO_BB_DOUT	I2S_AP_TO_BB_DOUT	
I2S_BB_TO_AP_DIN	I2S_BB_TO_AP_DIN	
UART_BB_TO_WLAN_COEX	UART_BB_TO_WLAN_COEX	
UART_WLAN_TO_BB_COEX	UART_WLAN_TO_BB_COEX	
NFC_TO_BB_CLK_REQ	NFC_TO_BB_CLKREQ	
BB_TO_NFC_CLK	BB_TO_NFC_CLK	
NFC_SWP1	BB_SIM1_SWP	
SWD_AOP_TO_MANY_SWCLK	SWD_AP_TO_BB_CLK	
SWD_AOP_BI_BB_SWDIO	SWD_AP_BI_BB_IO	
PMU_TO_BB_USB_VBUS_DETECT	USB_BB_VBUS	
90_USB_BB_DATA_P	90_USB_BB_P	
90_USB_BB_DATA_N	90_USB_BB_N	
50_LAT_WLAN_MLC	50_LAT_WLAN_MLC	
50_UAT_WLAN_2G_SOUTH	50_UAT_WLAN_2G_SOUTH	
50_UAT_WLAN_5G_SOUTH	50_UAT_WLAN_5G_SOUTH	
NC_AP_TO_GNSS_WAKE	NC_AP_TO_GNSS_WAKE (MAKE_BASE=TRUE)	
NC_PMU_TO_GNSS_EN	NC_PMU_TO_GNSS_EN (MAKE_BASE=TRUE)	PMU_TO_GNSS_EN
NC_UART_AP_TO_GNSS_TXD	NC_UART_AP_TO_GNSS_TXD (MAKE_BASE=TRUE)	UART_AP_TO_GNSS_TXD
NC_UART_GNSS_TO_AP_RXD	NC_UART_GNSS_TO_AP_RXD (MAKE_BASE=TRUE)	UART_GNSS_TO_AP_RXD
NC_UART_AP_TO_GNSS_RTS_L	NC_UART_AP_TO_GNSS_RTS_L (MAKE_BASE=TRUE)	UART_AP_TO_GNSS_RTS_L
NC_UART_GNSS_TO_AP_CTS_L	NC_UART_GNSS_TO_AP_CTS_L (MAKE_BASE=TRUE)	UART_GNSS_TO_AP_CTS_L
		GNSS_TO_PMU_HOST_WAKE
		AP_TO_GNSS_TIME_MARK

SYNC_MASTER=test_mlb SYNC_DATE=08/19/2016

PAGE TITLE
RADIOS

Apple Inc.

NOTICE OF PROPRIETARY PROPERTY:
THE INFORMATION CONTAINED HEREIN IS THE PROPRIETARY PROPERTY OF APPLE INC.
THE POSESSOR AGREES TO THE FOLLOWING:
I TO MAINTAIN THIS DOCUMENT IN CONFIDENCE
II NOT TO REPRODUCE OR COPY IT
III NOT TO REVEAL OR PUBLISH IT IN WHOLE OR PART
IV ALL RIGHTS RESERVED

DRAWING NUMBER	051-02222
SIZE	D
REVISION	6.0.0
BRANCH	evt-1
PAGE	80 OF 80
SHEET	12 OF 41

1. ALL RESISTANCE VALUES ARE IN OHMS, 0.1 WATT +/- 5%.
2. ALL CAPACITANCE VALUES ARE IN MICROFARADS.
3. ALL CRYSTALS & OSCILLATOR VALUES ARE IN HERTZ.

REV	ECN	DESCRIPTION OF REVISION	CK APPD / DATE
6	0008416016	ENGINEERING RELEASED	2017-04-06

D22 RADIO_MLB

LAST_MODIFICATION=Wed Apr 5 18:36:41 2017

0.134.3
EVT

PAGE	CSA	CONTENTS	SYNC	DATE
13 page1	1	page1	<SYNC_MASTER1>	<SYNC_DATE1>
14	2	BOM_OMIT_TABLE	<SYNC_MASTER2>	<SYNC_DATE2>
15	4	PMIC: BUCKS & LDOS	<SYNC_MASTER3>	<SYNC_DATE3>
16	6	PMIC: CLOCKS & CONTROL	<SYNC_MASTER4>	<SYNC_DATE4>
17	7	BB: POWER	<SYNC_MASTER5>	<SYNC_DATE5>
18	34	BB: CONTROL & HS PERIPHERALS	ap_core_flat	09/09/15
19	49	BB: GPIOS & QLINK	ap_core_flat	09/09/15
20	50	XCVR	ap_core_flat	09/09/15
21	58	XCVR	ap_core_flat	09/09/15
22	66	QPOET MODULE	ap_core_flat	08/13/15
23	80	LB PAD	ap_core_flat	09/09/15
24	<CSA_PAGE12>	HB PAD	ap_core_flat	09/09/15
25	<CSA_PAGE13>	UHB PAD	ap_core_flat	09/09/15
26	<CSA_PAGE14>	2G PA	ap_core_flat	09/09/15
27	<CSA_PAGE15>	LB DSM	ap_core_flat	09/09/15
28	<CSA_PAGE16>	HB DSM	ap_core_flat	09/09/15
29	<CSA_PAGE17>	COUPLER2	ap_core_flat	09/09/15
30	<CSA_PAGE18>	GNSS	ap_core_flat	09/09/15
31	<CSA_PAGE19>	METROCIRC	ap_core_flat	09/09/15
32	<CSA_PAGE20>	LOWER ANTENNA	ap_core_flat	09/09/15
33	<CSA_PAGE21>	UPPER ANTENNA	ap_core_flat	09/09/15
34	<CSA_PAGE22>	SIM, EUICC, DEBUG CONN	ap_core_flat	09/09/15
35	<CSA_PAGE23>	TEST POINTS	ap_core_flat	09/09/15
36	<CSA_PAGE24>	RFFE TO GPO TRANSLATOR	ap_core_flat	09/09/15
	<CSA_PAGE25>		ap_core_flat	09/09/15
	<CSA_PAGE26>		ap_core_flat	09/09/15
	<CSA_PAGE27>		MASTER	<SYNC_DATE27>
	<CSA_PAGE28>		ap_core_flat	08/10/15
	<CSA_PAGE29>		ap_core_flat	09/09/15
	<CSA_PAGE30>		MASTER	<SYNC_DATE30>

SCH: 951-03772
BOM: 939-XXXXX

ALTERNATES

PART NUMBER	ALTERNATE FOR PART NUMBER	REFERENCE DESIGNATOR(S)	DESCRIPTION	BOM OPTION
335S00013	335S0894	U_EEPROM_E	IC, EEPROM	BOM_TABLE_ALTS
197S00065	197S00093	Y401_E	XTAL, 38P4MHZ	BOM_TABLE_ALTS
197S00065	197S00067	Y401_E	XTAL, 38P4MHZ	BOM_TABLE_ALTS

AP CONNECTIONS

POWER

24 23 21 7 IN PP1V8_S2 — VOLTAGE=1.8V
22 10 3 IN PP_VDD_MAIN
24 23 IN PP3V0_S2
IN PP_VDD_BOOST — PP_VDD_BOOST 3 10 22 — MAKE_BASE=TRUE

SWD/USB

23 6 IN SWD_AOP_TO_MANY_SWCLK
23 6 IO SWD_AOP_BI_BB_SWDIO
23 22 4 IN PMU_TO_BB_USB_VBUS_DETECT
22 6 IO 90_USB_BB_DATA_P
22 6 IO 90_USB_BB_DATA_N

BB CONTROL

23 4 IN PMU_TO_BBPMU_RESET_L
22 4 IN AP_TO_BB_RESET_L
23 7 OUT BB_TO_AP_RESET_DETECT_L
23 7 OUT BB_TO_STROBE_DRIVER_GSM_BURST_IND

23 7 IN AP_TO_BB_TIME_MARK
23 7 IN AP_TO_BB_COREDUMP
4 IN AP_TO_MANY_BSYNC
23 7 IN AP_TO_BB_IPC_GPIO1

PCIE

23 6 IN 90_PCIE_AP_TO_BB_REFCLK_P
23 6 IN 90_PCIE_AP_TO_BB_REFCLK_N
23 6 IN 90_PCIE_AP_TO_BB_TXD_P
23 6 IN 90_PCIE_AP_TO_BB_TXD_N
23 6 OUT 90_PCIE_BB_TO_AP_RXD_P
23 6 OUT 90_PCIE_BB_TO_AP_RXD_N
23 7 IN PCIE_AP_TO_BB_RESET_L
23 7 IO PCIE_BB_BI_AP_CLKREQ_L
23 7 OUT BB_TO_PMU_PCIE_HOST_WAKE_L

AOP

23 7 IN UART_AOP_TO_BB_TXD
23 7 OUT UART_BB_TO_AOP_RXD

AUDIO

23 7 OUT I2S_BB_TO_AP_BCLK
23 7 OUT I2S_BB_TO_AP_LRCLK
23 7 IN I2S_AP_TO_BB_DOUT
23 7 OUT I2S_BB_TO_AP_DIN

WLAN

23 22 7 IN UART_BB_TO_WLAN_COEX
23 22 7 OUT UART_WLAN_TO_BB_COEX

STOCKHOLM

23 22 IO NFC_SWP1

4 IN NFC_TO_BB_CLK_REQ
23 4 OUT BB_TO_NFC_CLK

WIFI

20 IO 50_LAT_WLAN_MLC
19 IO 50_UAT_WLAN_2G_SOUTH
19 IO 50_UAT_WLAN_5G_SOUTH

DOCK

page1

DRAWING TITLE	SCH,MLB,BOT,X891
Apple Inc.	DRAWING NUMBER 051-02222 — SIZE D
	REVISION 6.0.0
	BRANCH evt-1
	PAGE 1 OF 24
	SHEET 13 OF 41

NOTICE OF PROPRIETARY PROPERTY:
THE INFORMATION CONTAINED HEREIN IS THE PROPRIETARY PROPERTY OF APPLE INC.
THE POSESSOR AGREES TO THE FOLLOWING:
I TO MAINTAIN THIS DOCUMENT IN CONFIDENCE
II NOT TO REPRODUCE OR COPY IT
III NOT TO REVEAL OR PUBLISH IT IN WHOLE OR PART
IV ALL RIGHTS RESERVED

BOM OPTIONS:

RF PMIC: SWITCHERS & LDOS

CONFIDENTIAL AND PROPRIETARY APPLE SYSTEM DESIGN. FOR REFERENCE ONLY - NOT A CHANGE REQUEST

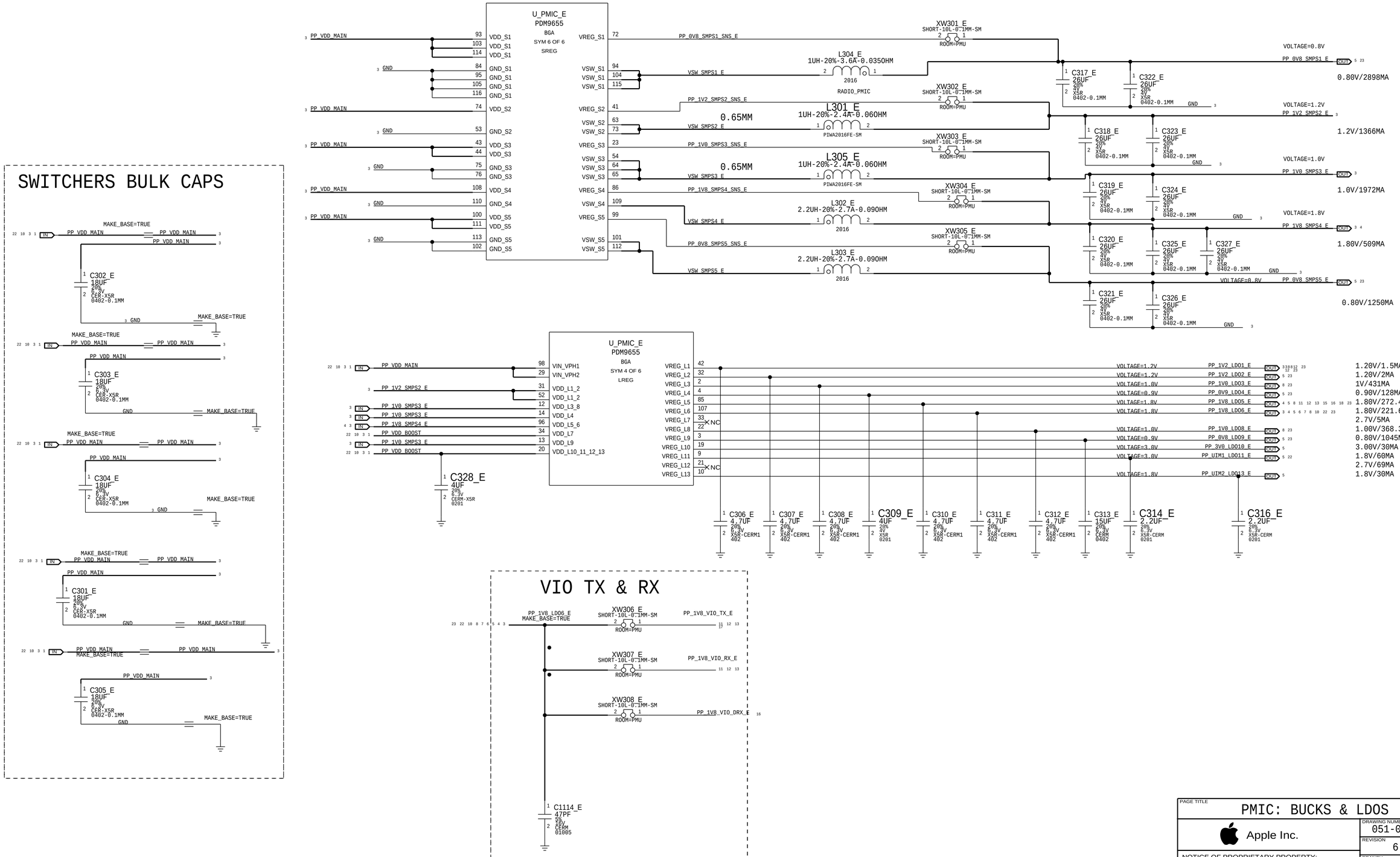

PAGE TITLE	PMIC: BUCKS & LDOS
Apple Inc.	
DRAWING NUMBER	051-02222
SIZE	D
REVISION	6.0.0
BRANCH	evt-1
PAGE	3 OF 24
SHEET	15 OF 41

NOTICE OF PROPRIETARY PROPERTY:
THE INFORMATION CONTAINED HEREIN IS THE PROPRIETARY PROPERTY OF APPLE INC.
THE POSESSOR AGREES TO THE FOLLOWING:
I TO MAINTAIN THIS DOCUMENT IN CONFIDENCE
II NOT TO REPRODUCE OR COPY IT
III NOT TO REVEAL OR PUBLISH IT IN WHOLE OR PART
IV ALL RIGHTS RESERVED

RF PMIC: XTAL, CLOCKS AND MISCELLANEOUS

HW_REV_ID	R407	R408	MLB/RADIO_DEV
<0.10V	NOSTUFF	51.1K	T500/DEV1
0.15V-0.25V	422K	51.1K	PROTO1.5
0.35V-0.45V	180K	51.1K	PROTO2.5/DEV2
0.55V-0.65V	105K	51.1K	PROTO1/DEV3
0.75V-0.85V	66.5K	51.1K	PROTO2/DEV4
0.95V-1.05V	44.2K	51.1K	EVT
1.15V-1.25V	28K	51.1K	CARRIER/DEV5
1.35V-1.45V	16.5K	51.1K	DVT/DEV6
1.55V-1.65V	7.87K	51.1K	PVT/DEV7
1.75V-1.85V	10K	NOSTUFF	PROTO3

PA_THERM2	R409	R410	PRODUCT TYPE	Y
0.00V-0.10V	NOSTUFF	51.1K	RADIO DEV	1
0.15V-0.25V	422K	51.1K	3RD TYPE	2
0.35V-0.45V	180K	51.1K	POR MLB (FF)	3
0.55V-0.65V	105K	51.1K	SPARE	4
0.75V-0.85V	66.5K	51.1K	SPARE	5
0.95V-1.05V	44.2K	51.1K	SPARE	6
1.15V-1.25V	28K	51.1K	SPARE	7
1.35V-1.45V	16.5K	51.1K	SPARE	8
1.55V-1.65V	7.87K	51.1K	SPARE	9
1.75V-1.85V	10K	NOSTUFF	SPARE	A

JPN_ROW_SEL	R430	R431	MAV PLATFORM	Y	SKU
<0.10V	NOSTUFF	51.1K	MAV17.0	0	ROW
0.15V-0.25V	422K	51.1K	MAV17.1	1	JPN
0.35V-0.45V	180K	51.1K	MAV17.2	2	ROW
0.55V-0.65V	105K	51.1K	MAV17.3	3	JPN
0.75V-0.85V	66.5K	51.1K	MAV17.4	4	ROW
0.95V-1.05V	44.2K	51.1K	MAV17.5	5	JPN
1.15V-1.25V	28K	51.1K	MAV17.6	6	ROW
1.35V-1.45V	16.5K	51.1K	MAV17.7	7	JPN
1.55V-1.65V	7.87K	51.1K	MAV17.8	8	ROW
1.75V-1.85V	10K	NOSTUFF	MAV17.9	9	JPN

NOTE XTAL SYMBOL MIRRORED COMPARED TO PREVIOUS SCH

PART#	QTY	DESCRIPTION	REFERENCE DESIGNATOR(S)	CRITICAL	BOM OPTION
118S0743	1	RESISTOR 01005, 44.2K OHMS 1%	R430_E	CRITICAL	JPN
118S0612	1	RESISTOR 01005, 66.5K OHMS 1%	R430_E	CRITICAL	ROW

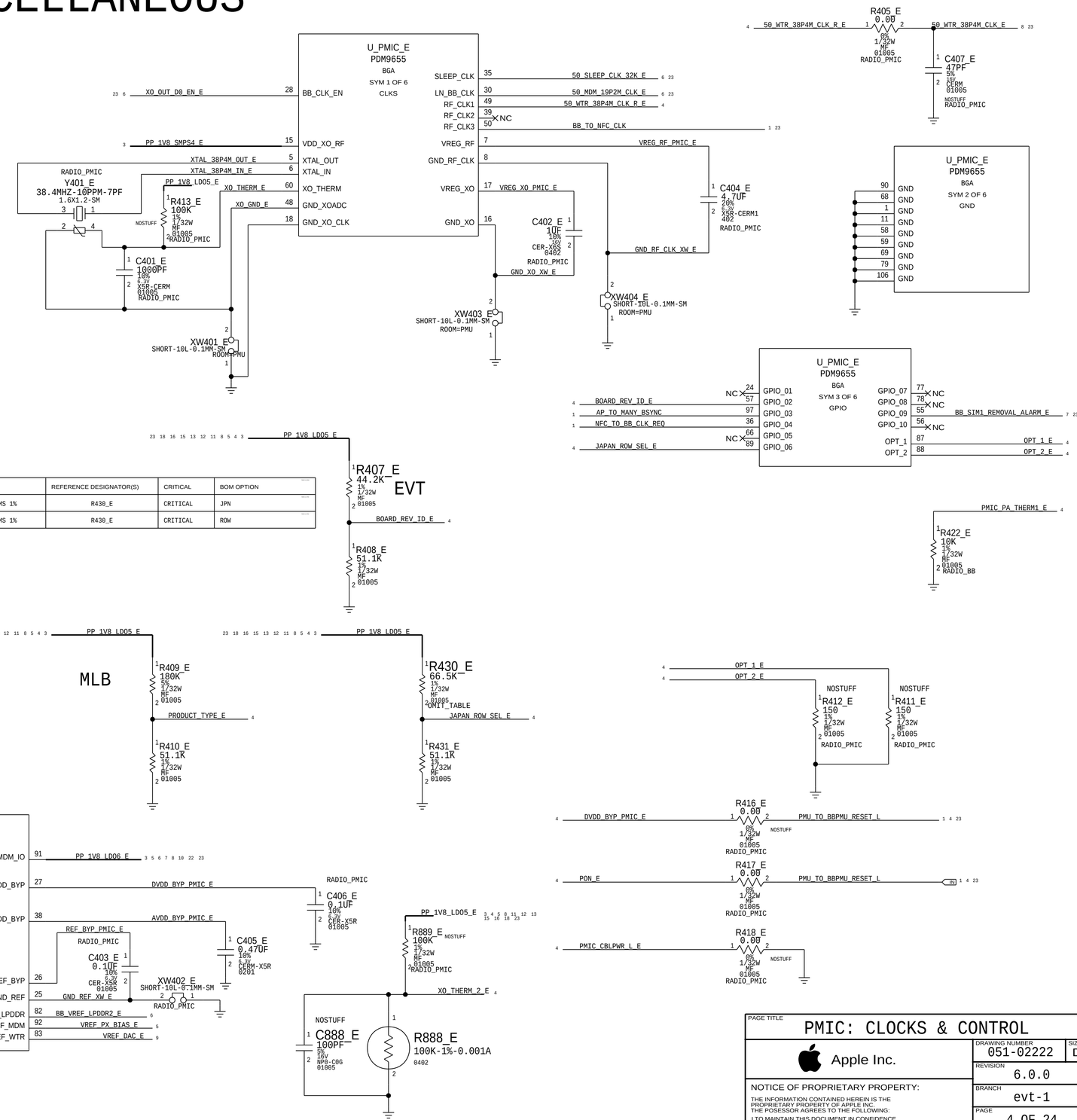

CONFIDENTIAL AND PROPRIETARY APPLE SYSTEM DESIGN. FOR REFERENCE ONLY - NOT A CHANGE REQUEST

PAGE TITLE: PMIC: CLOCKS & CONTROL

Apple Inc.

DRAWING NUMBER: 051-02222 SIZE: D

REVISION: 6.0.0

BRANCH: evt-1

PAGE: 4 OF 24

SHEET: 16 OF 41

NOTICE OF PROPRIETARY PROPERTY:
THE INFORMATION CONTAINED HEREIN IS THE PROPRIETARY PROPERTY OF APPLE INC.
THE POSESSOR AGREES TO THE FOLLOWING:
I TO MAINTAIN THIS DOCUMENT IN CONFIDENCE
II NOT TO REPRODUCE OR COPY IT
III NOT TO REVEAL OR PUBLISH IT IN WHOLE OR PART
IV ALL RIGHTS RESERVED

OPT CONFIG

BB:POWER

CONFIDENTIAL AND PROPRIETARY APPLE SYSTEM DESIGN. FOR REFERENCE ONLY - NOT A CHANGE REQUEST

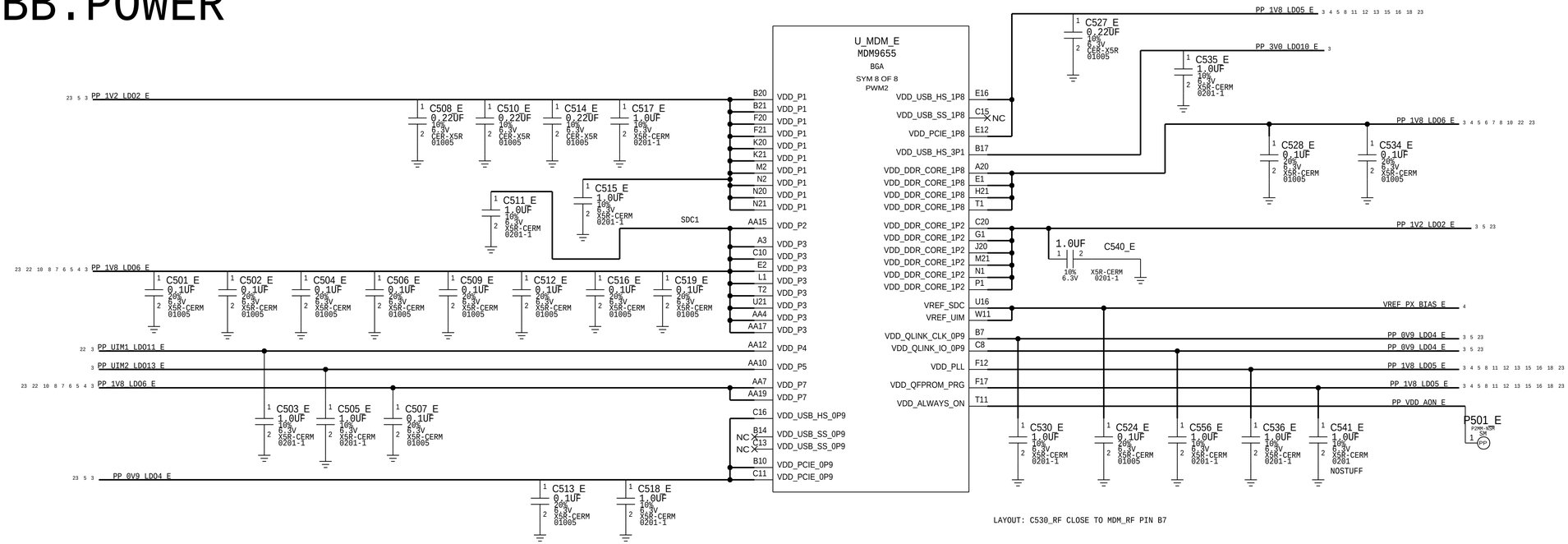

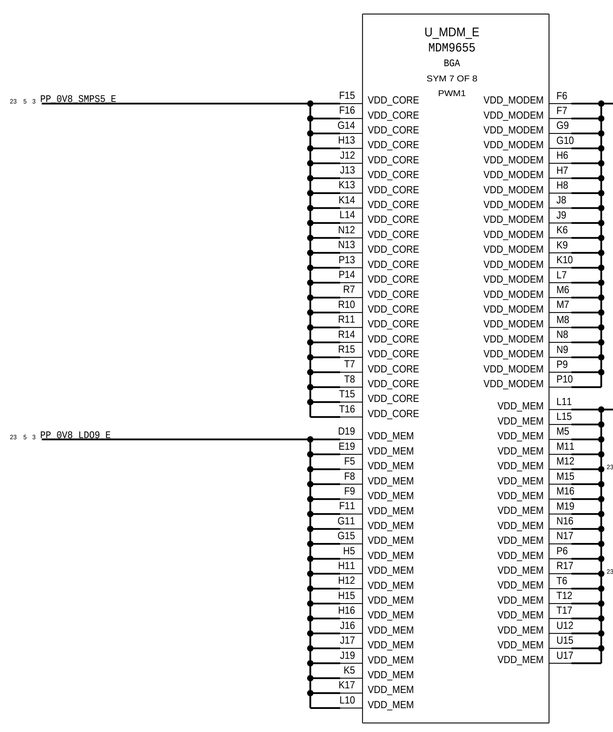

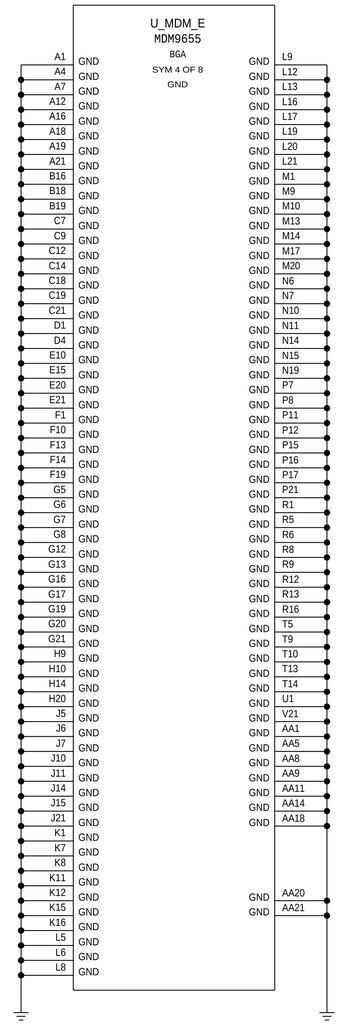

PART#	QTY	DESCRIPTION	REFERENCE DESIGNATOR(S)	CRITICAL	BOM OPTION
138S00159	3	SOFT-TERM,2.2UF,0201,KYOCERA	C520_E,C521_E,C522_E		SOFT_CAP
138S0831	3	TYPICAL,2.2UF,0201,MURATA	C520_E,C521_E,C522_E		TYPICAL_CAP

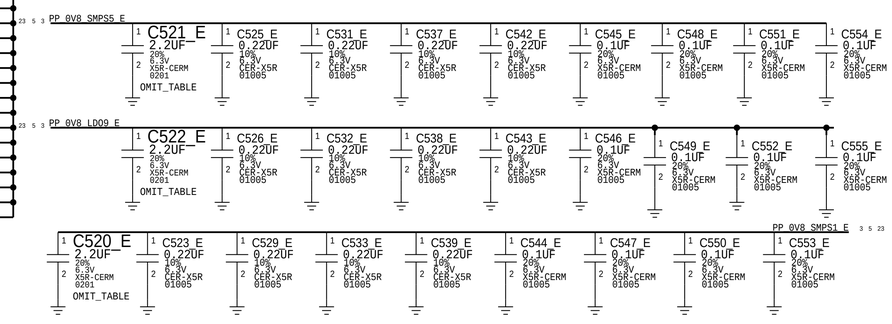

PAGE TITLE: BB: POWER

Apple Inc.

DRAWING NUMBER: 051-02222 | SIZE: D

REVISION: 6.0.0

BRANCH: evt-1

PAGE: 5 OF 24

SHEET: 17 OF 41

NOTICE OF PROPRIETARY PROPERTY:
THE INFORMATION CONTAINED HEREIN IS THE PROPRIETARY PROPERTY OF APPLE INC.
THE POSESSOR AGREES TO THE FOLLOWING:
I TO MAINTAIN THIS DOCUMENT IN CONFIDENCE
II NOT TO REPRODUCE OR COPY IT
III NOT TO REVEAL OR PUBLISH IT IN WHOLE OR PART
IV ALL RIGHTS RESERVED

BB:CONTROL & HS PERIPHERALS

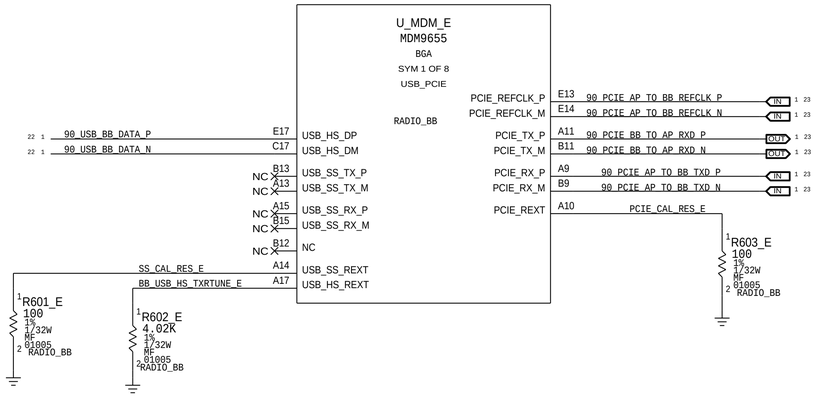

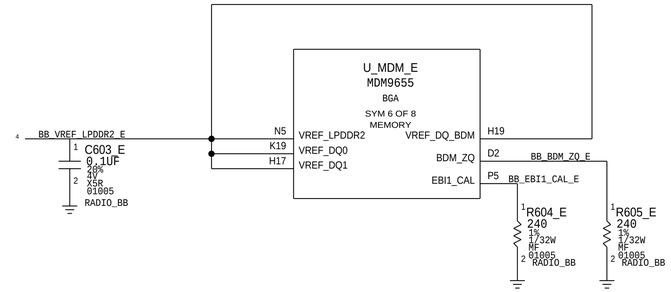

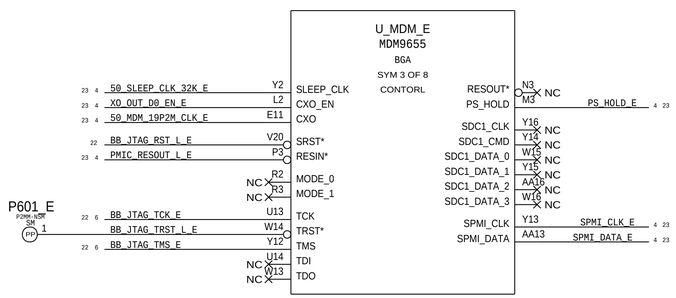

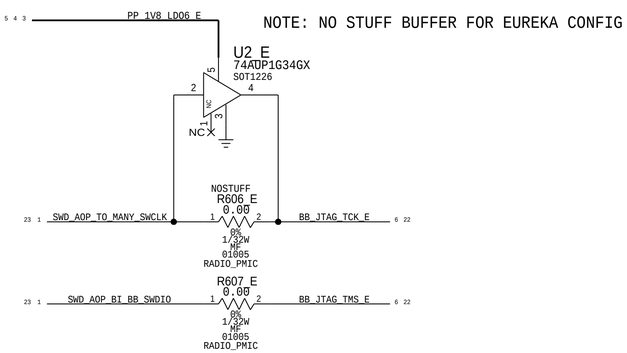

CONFIDENTIAL AND PROPRIETARY APPLE SYSTEM DESIGN. FOR REFERENCE ONLY - NOT A CHANGE REQUEST

PAGE TITLE	BB: CONTROL & HS PERIPHERALS
Apple Inc.	DRAWING NUMBER 051-02222 SIZE D
	REVISION 6.0.0
	BRANCH evt-1
	PAGE 6 OF 24
	SHEET 18 OF 41

NOTICE OF PROPRIETARY PROPERTY:
THE INFORMATION CONTAINED HEREIN IS THE PROPRIETARY PROPERTY OF APPLE INC.
THE POSESSOR AGREES TO THE FOLLOWING:
I TO MAINTAIN THIS DOCUMENT IN CONFIDENCE
II NOT TO REPRODUCE OR COPY IT
III NOT TO REVEAL OR PUBLISH IT IN WHOLE OR PART
IV ALL RIGHTS RESERVED

BB:GPIOS & QLINK

CONFIDENTIAL AND PROPRIETARY APPLE SYSTEM DESIGN. FOR REFERENCE ONLY - NOT A CHANGE REQUEST

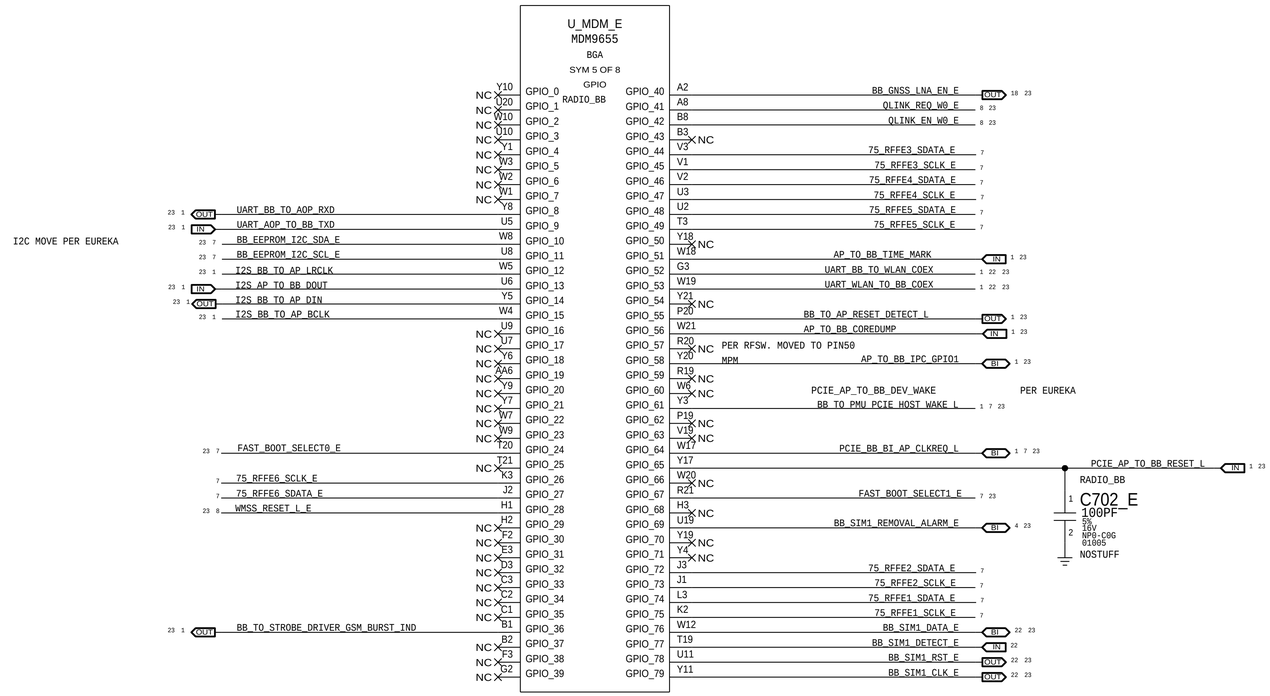

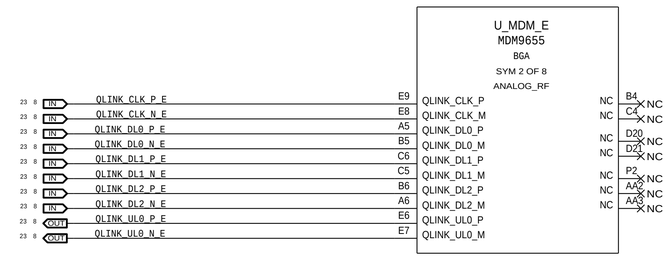

BB EEPROM

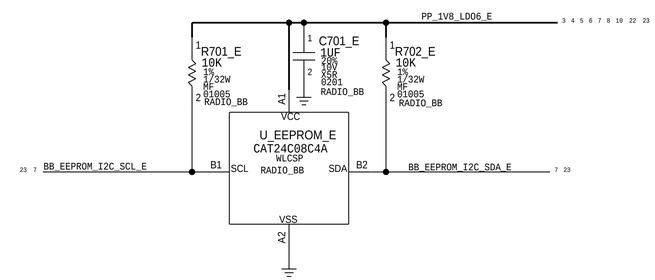

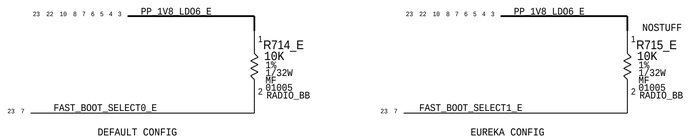

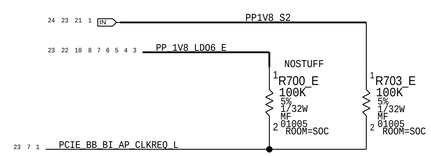

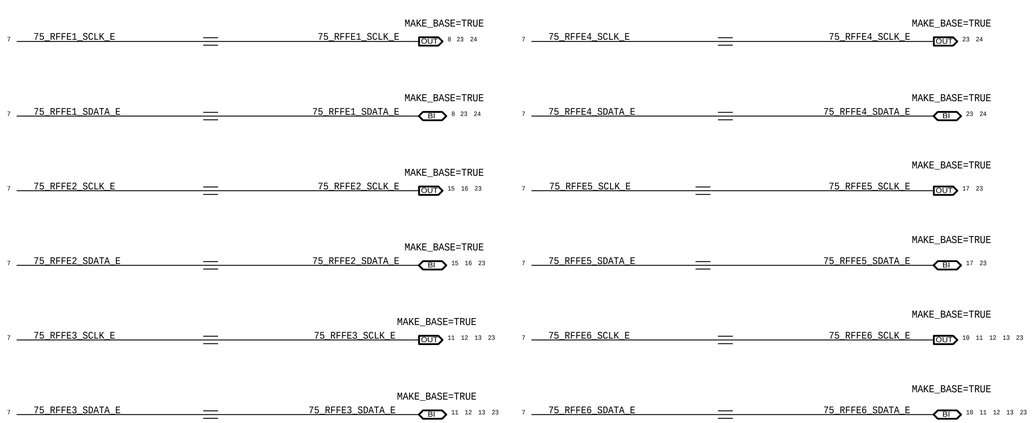

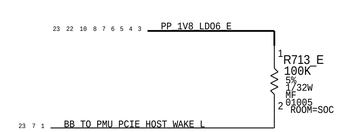

RFFE MAP

RFFE1 - WTR, LATGPO, LATUNE
RFFE2 - HB DSM, LB DSM
RFFE3 - UHB, HB, LB PAD LNA
RFFE4 - UATGPO, UATUNE
RFFE5 - CPL
RFFE6 - QET, 2G PA/UHB, HB, LA PAD

PAGE TITLE	BB: GPIOS & QLINK
Apple Inc.	DRAWING NUMBER 051-02222
	SIZE D
	REVISION 6.0.0
	BRANCH evt-1
	PAGE 7 OF 24
	SHEET 19 OF 41

NOTICE OF PROPRIETARY PROPERTY:
THE INFORMATION CONTAINED HEREIN IS THE PROPRIETARY PROPERTY OF APPLE INC.
THE POSESSOR AGREES TO THE FOLLOWING:
I TO MAINTAIN THIS DOCUMENT IN CONFIDENCE
II NOT TO REPRODUCE OR COPY IT
III NOT TO REVEAL OR PUBLISH IT IN WHOLE OR PART
IV ALL RIGHTS RESERVED

TRANSCEIVER: QLINK & POWER

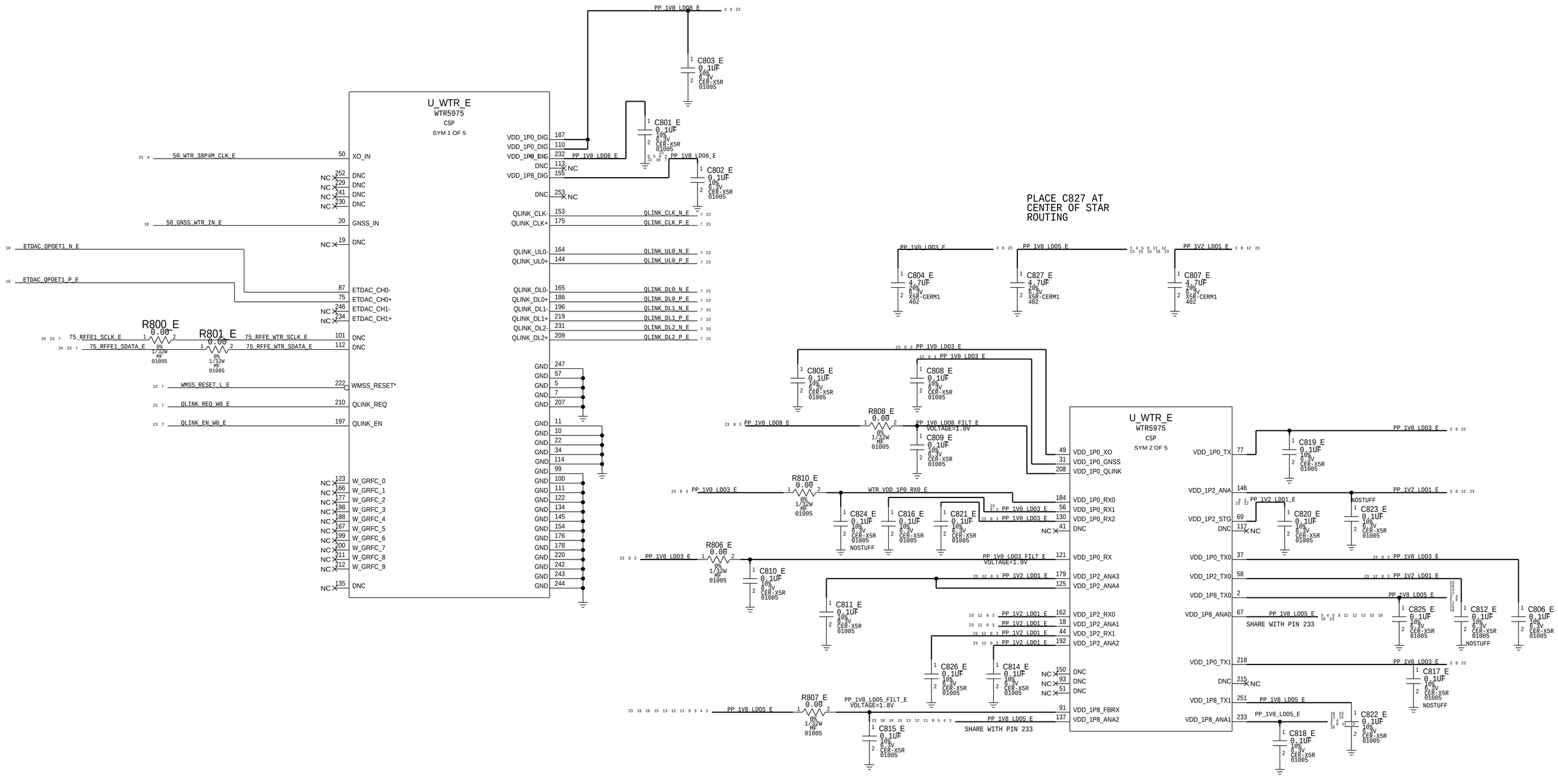

CONFIDENTIAL AND PROPRIETARY APPLE SYSTEM DESIGN. FOR REFERENCE ONLY - NOT A CHANGE REQUEST

PAGE TITLE	XCVR
	Apple Inc.
DRAWING NUMBER	051-02222
SIZE	D
REVISION	6.0.0
BRANCH	evt-1
PAGE	8 OF 24
SHEET	20 OF 41

NOTICE OF PROPRIETARY PROPERTY:
THE INFORMATION CONTAINED HEREIN IS THE PROPRIETARY PROPERTY OF APPLE INC.
THE POSESSOR AGREES TO THE FOLLOWING:
I TO MAINTAIN THIS DOCUMENT IN CONFIDENCE
II NOT TO REPRODUCE OR COPY IT
III NOT TO REVEAL OR PUBLISH IT IN WHOLE OR PART
IV ALL RIGHTS RESERVED

TRANSCEIVER: TX & RX

CONFIDENTIAL AND PROPRIETARY APPLE SYSTEM DESIGN. FOR REFERENCE ONLY - NOT A CHANGE REQUEST

PART#	QTY	DESCRIPTION	REFERENCE DESIGNATOR(S)	CRITICAL	BOM OPTION
117S0161	1	01005 0R	R919_E	CRITICAL	ROW
117S0161	1	01005 0R	R922_E	CRITICAL	ROW

PART#	QTY	DESCRIPTION	REFERENCE DESIGNATOR(S)	CRITICAL	BOM OPTION
117S0161	1	01005 0R	R918_E	CRITICAL	JPN
117S0161	1	01005 0R	R920_E	CRITICAL	JPN

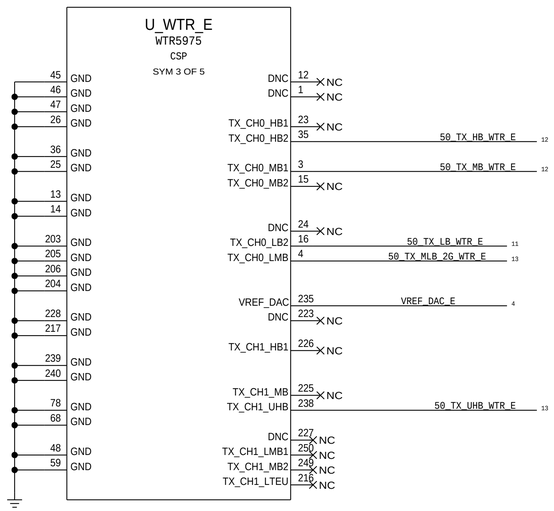

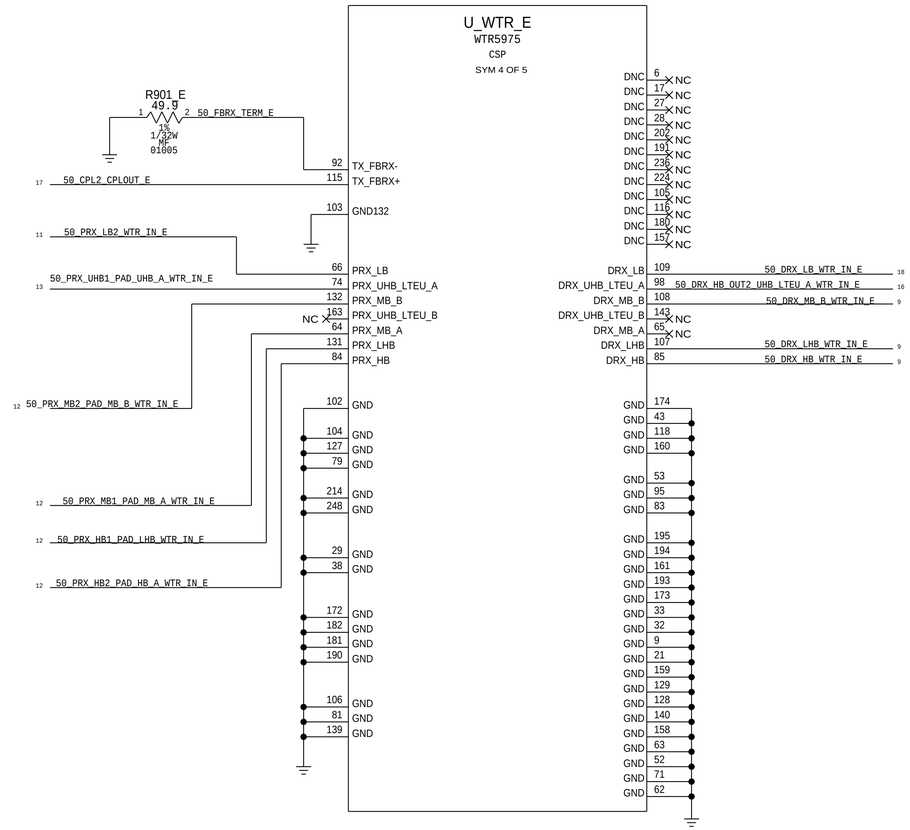

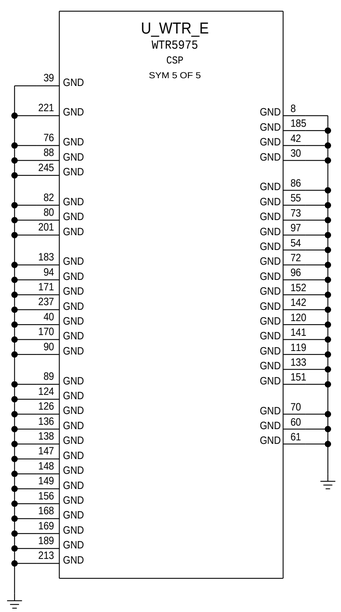

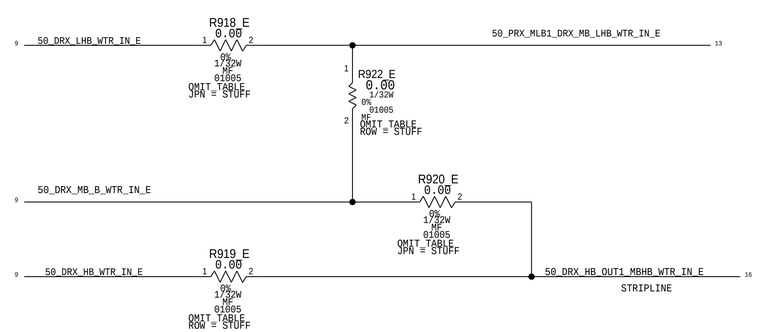

PAGE TITLE: XCVR

Apple Inc.

DRAWING NUMBER: 051-02222 | SIZE: D

REVISION: 6.0.0

BRANCH: evt-1

PAGE: 9 OF 24

SHEET: 21 OF 41

NOTICE OF PROPRIETARY PROPERTY:
THE INFORMATION CONTAINED HEREIN IS THE PROPRIETARY PROPERTY OF APPLE INC.
THE POSESSOR AGREES TO THE FOLLOWING:
I TO MAINTAIN THIS DOCUMENT IN CONFIDENCE
II NOT TO REPRODUCE OR COPY IT
III NOT TO REVEAL OR PUBLISH IT IN WHOLE OR PART
IV ALL RIGHTS RESERVED

QET:MODULE

CONFIDENTIAL AND PROPRIETARY APPLE SYSTEM DESIGN. FOR REFERENCE ONLY - NOT A CHANGE REQUEST

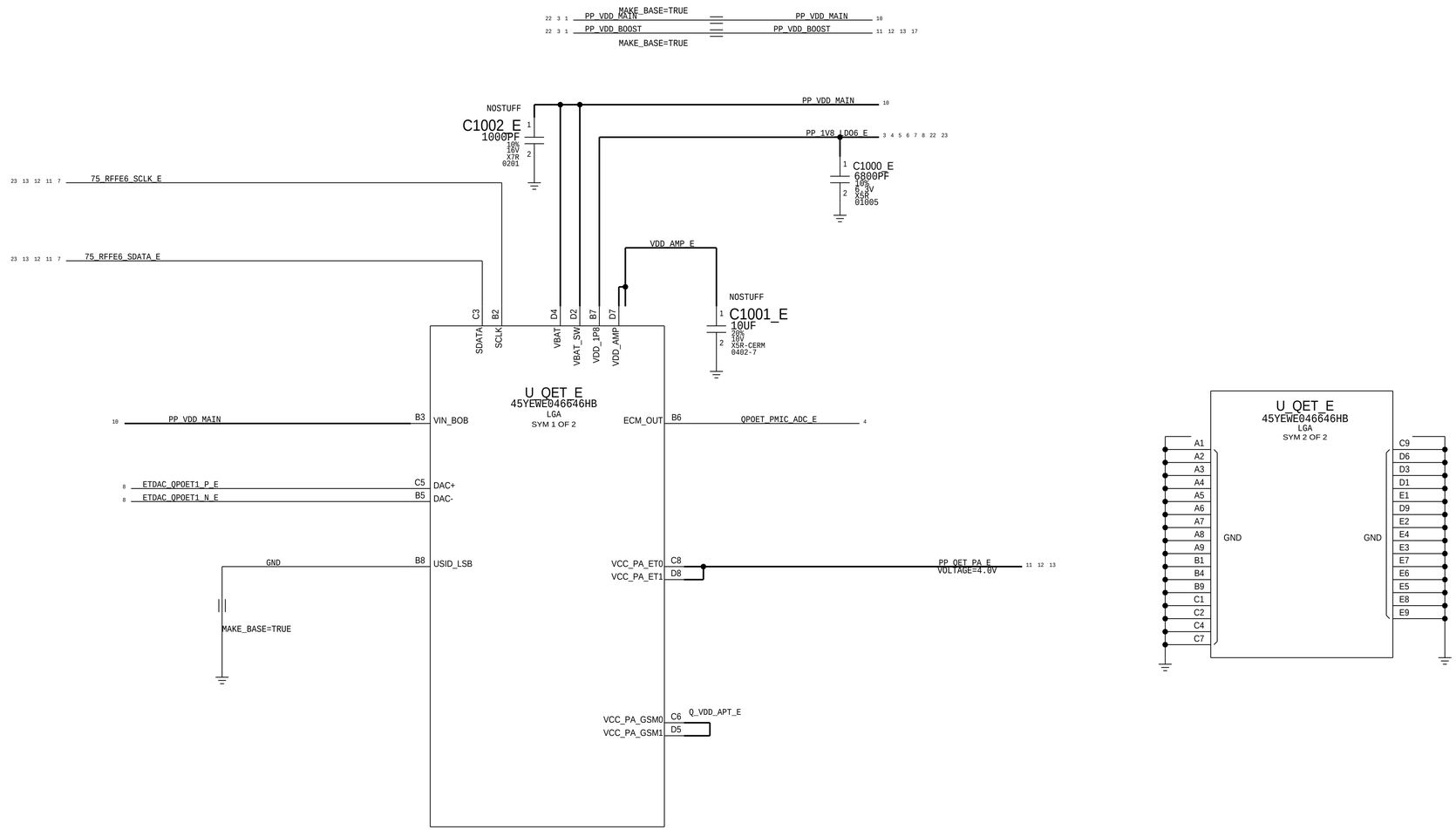

PAGE TITLE	QPOET MODULE
	Apple Inc.
DRAWING NUMBER	051-02222
SIZE	D
REVISION	6.0.0
BRANCH	evt-1
PAGE	10 OF 24
SHEET	22 OF 41

NOTICE OF PROPRIETARY PROPERTY:
THE INFORMATION CONTAINED HEREIN IS THE PROPRIETARY PROPERTY OF APPLE INC.
THE POSESSOR AGREES TO THE FOLLOWING:
I TO MAINTAIN THIS DOCUMENT IN CONFIDENCE
II NOT TO REPRODUCE OR COPY IT
III NOT TO REVEAL OR PUBLISH IT IN WHOLE OR PART
IV ALL RIGHTS RESERVED

LB PAD

CONFIDENTIAL AND PROPRIETARY APPLE SYSTEM DESIGN. FOR REFERENCE ONLY - NOT A CHANGE REQUEST

PART#	QTY	DESCRIPTION	REFERENCE DESIGNATOR(S)	CRITICAL	BOM OPTION
155S00316	1	2G CPLB JPN	CPL2GB_E	CRITICAL	JPN

PART#	QTY	DESCRIPTION	REFERENCE DESIGNATOR(S)	CRITICAL	BOM OPTION

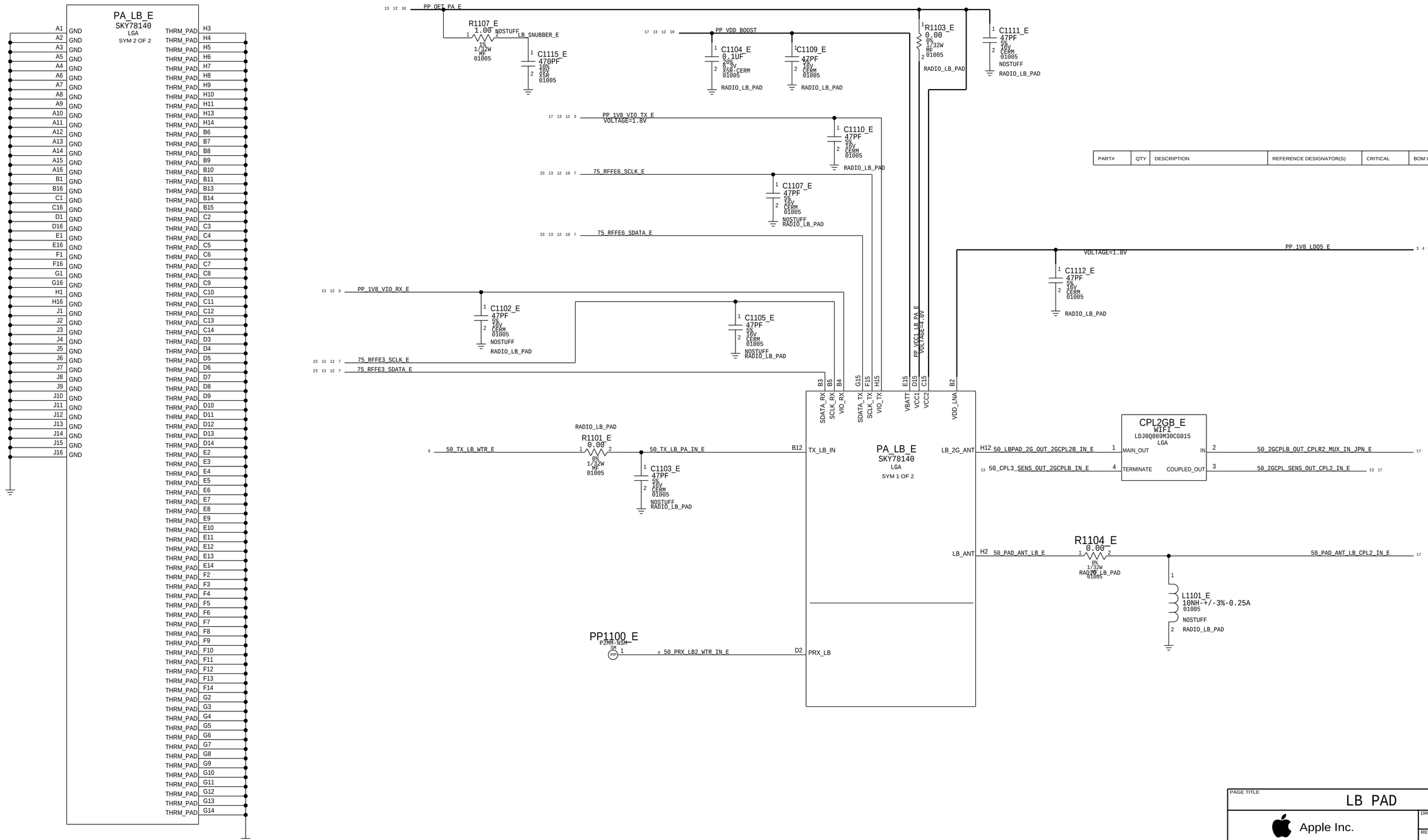

PAGE TITLE	LB PAD
Apple Inc.	DRAWING NUMBER 051-02222 SIZE D
	REVISION 6.0.0
NOTICE OF PROPRIETARY PROPERTY: THE INFORMATION CONTAINED HEREIN IS THE PROPRIETARY PROPERTY OF APPLE INC. THE POSESSOR AGREES TO THE FOLLOWING: I TO MAINTAIN THIS DOCUMENT IN CONFIDENCE II NOT TO REPRODUCE OR COPY IT III NOT TO REVEAL OR PUBLISH IT IN WHOLE OR PART IV ALL RIGHTS RESERVED	BRANCH evt-1
	PAGE 11 OF 24
	SHEET 23 OF 41

CONFIDENTIAL AND PROPRIETARY APPLE SYSTEM DESIGN. FOR REFERENCE ONLY - NOT A CHANGE REQUEST

HB PAD

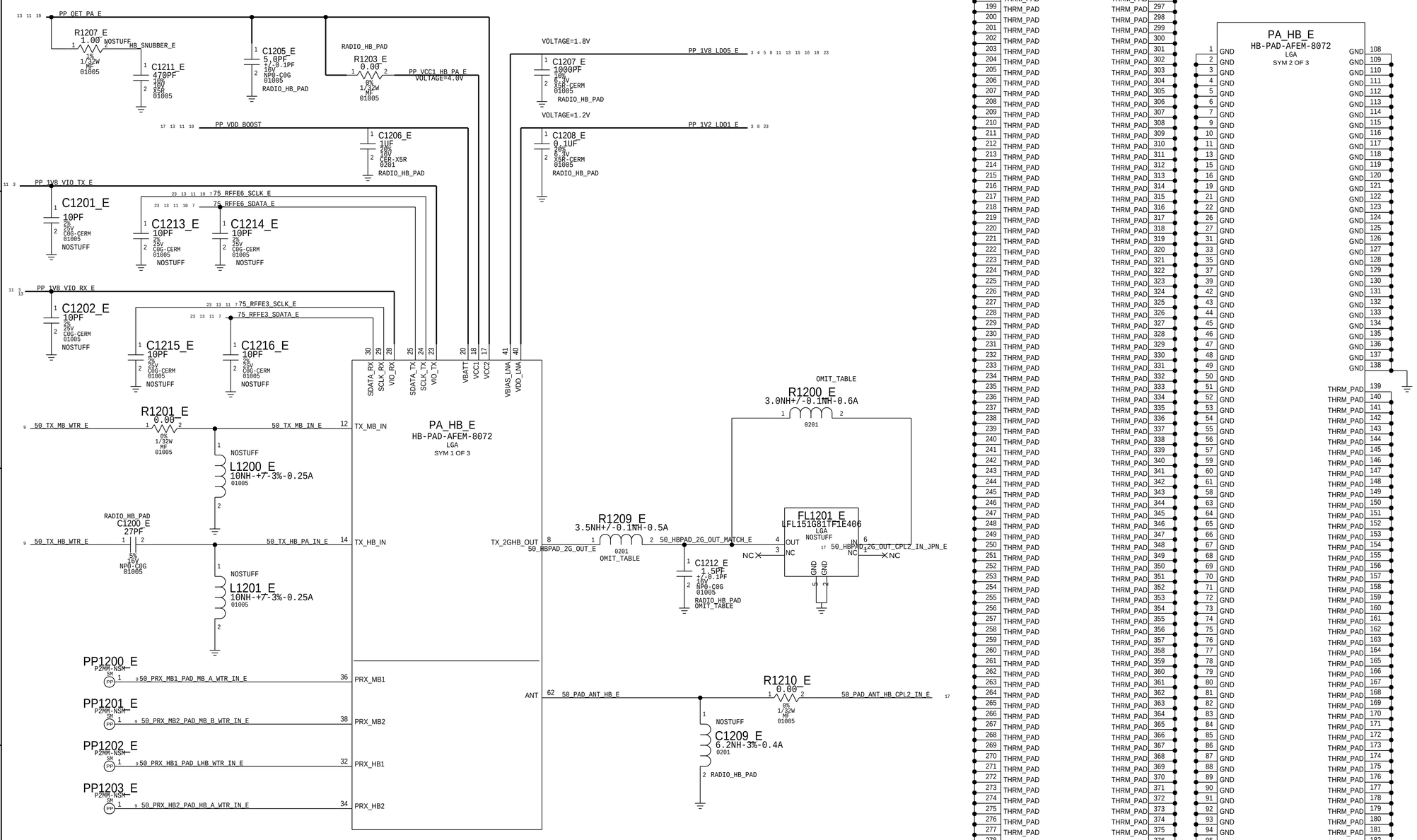

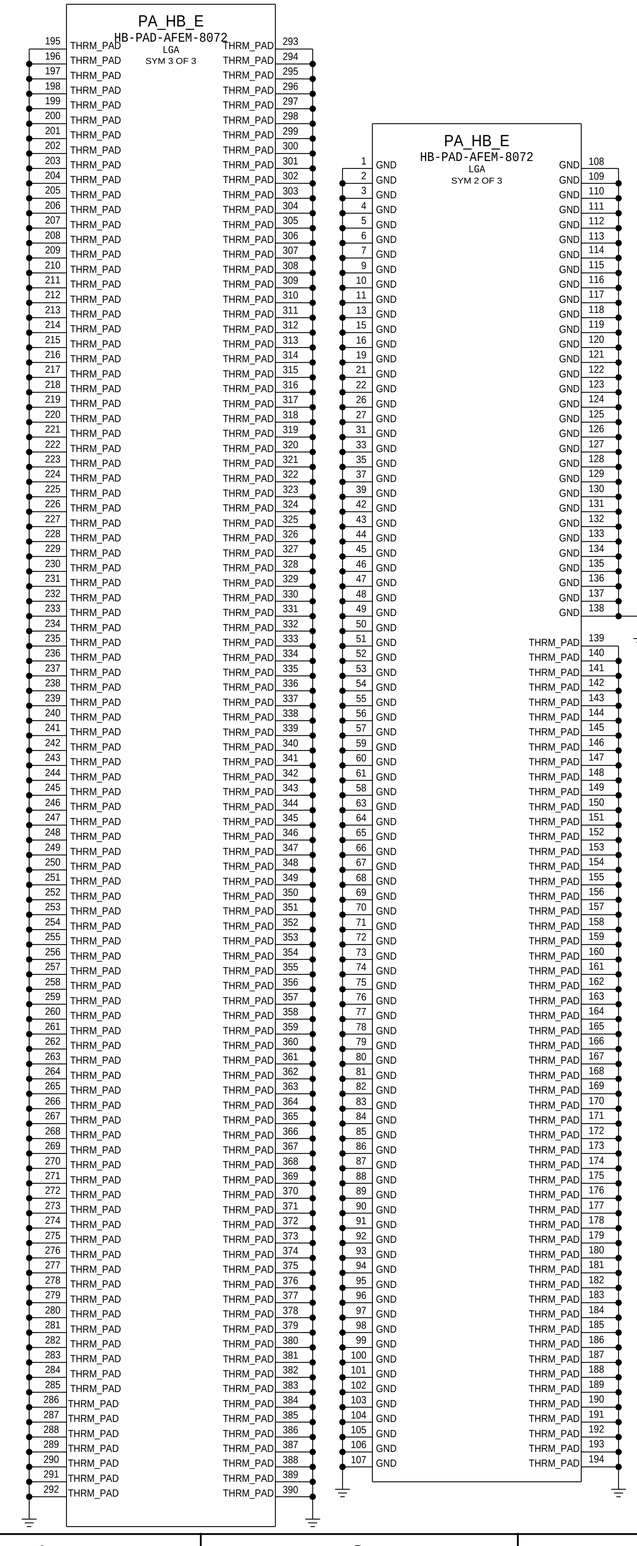

PART#	QTY	DESCRIPTION	REFERENCE DESIGNATOR(S)	CRITICAL	BOM OPTION
152S00026	1	0201 2G HB MATCH, 3.5NH 0.5A	R1209_E	CRITICAL	JPN
152S2045	1	0201 2G HB MATCH, 3.0NH 0.6A	R1200_E	CRITICAL	JPN
131S0246	1	01005 2G HB MATCH, 1.5PF	C1212_E	CRITICAL	JPN

PART#	QTY	DESCRIPTION	REFERENCE DESIGNATOR(S)	CRITICAL	BOM OPTION

PAGE TITLE: HB PAD

Apple Inc.

DRAWING NUMBER: 051-02222 SIZE: D

REVISION: 6.0.0

BRANCH: evt-1

PAGE: 12 OF 24

SHEET: 24 OF 41

NOTICE OF PROPRIETARY PROPERTY:
THE INFORMATION CONTAINED HEREIN IS THE PROPRIETARY PROPERTY OF APPLE INC.
THE POSESSOR AGREES TO THE FOLLOWING:
I TO MAINTAIN THIS DOCUMENT IN CONFIDENCE
II NOT TO REPRODUCE OR COPY IT
III NOT TO REVEAL OR PUBLISH IT IN WHOLE OR PART
IV ALL RIGHTS RESERVED

CONFIDENTIAL AND PROPRIETARY APPLE SYSTEM DESIGN. FOR REFERENCE ONLY - NOT A CHANGE REQUEST

UHB/2G PAD -JPN

PART#	QTY	DESCRIPTION	REFERENCE DESIGNATOR(S)	CRITICAL	BOM OPTION
353S01243	1	UHB PAD MP	PA_UHB_E	CRITICAL	JPN
117S0161	1	MLB/2GTX IN MCH2, 0 OHMS	R1302_E	CRITICAL	JPN
117S0161	1	UHB INPUT MCH1, 0 OHMS	R1303_E	CRITICAL	JPN
117S0161	1	MLB/2G MB OUT MCH1 01005 0R	R1305_E	CRITICAL	JPN
117S0161	1	UHB1 OUTPUT MCH1, 0 OHMS	R1306_E	CRITICAL	JPN
152S00494	1	UHB2 OUT/DRX BP MCH1, 0.8NH 0.9A	R1307_E	CRITICAL	JPN
132S0683	1	UHB LNA DECOUPLING, 0.1UF 6.3V 10%	C1312_E	CRITICAL	JPN
131S0214	1	VBAT DECOUPLING,18PF	C1311_E	CRITICAL	JPN
138S0692	1	VBAT DECOUPLING, 1UF	C1323_E	CRITICAL	JPN
117S0161	1	VCC2/VCC1 RESISTOR OPTION, 0 OHM	R1304_E	CRITICAL	JPN
131S0375	1	MLB OUTPUT MCH UAT, 01005 1.0PF	C1318_E	CRITICAL	JPN

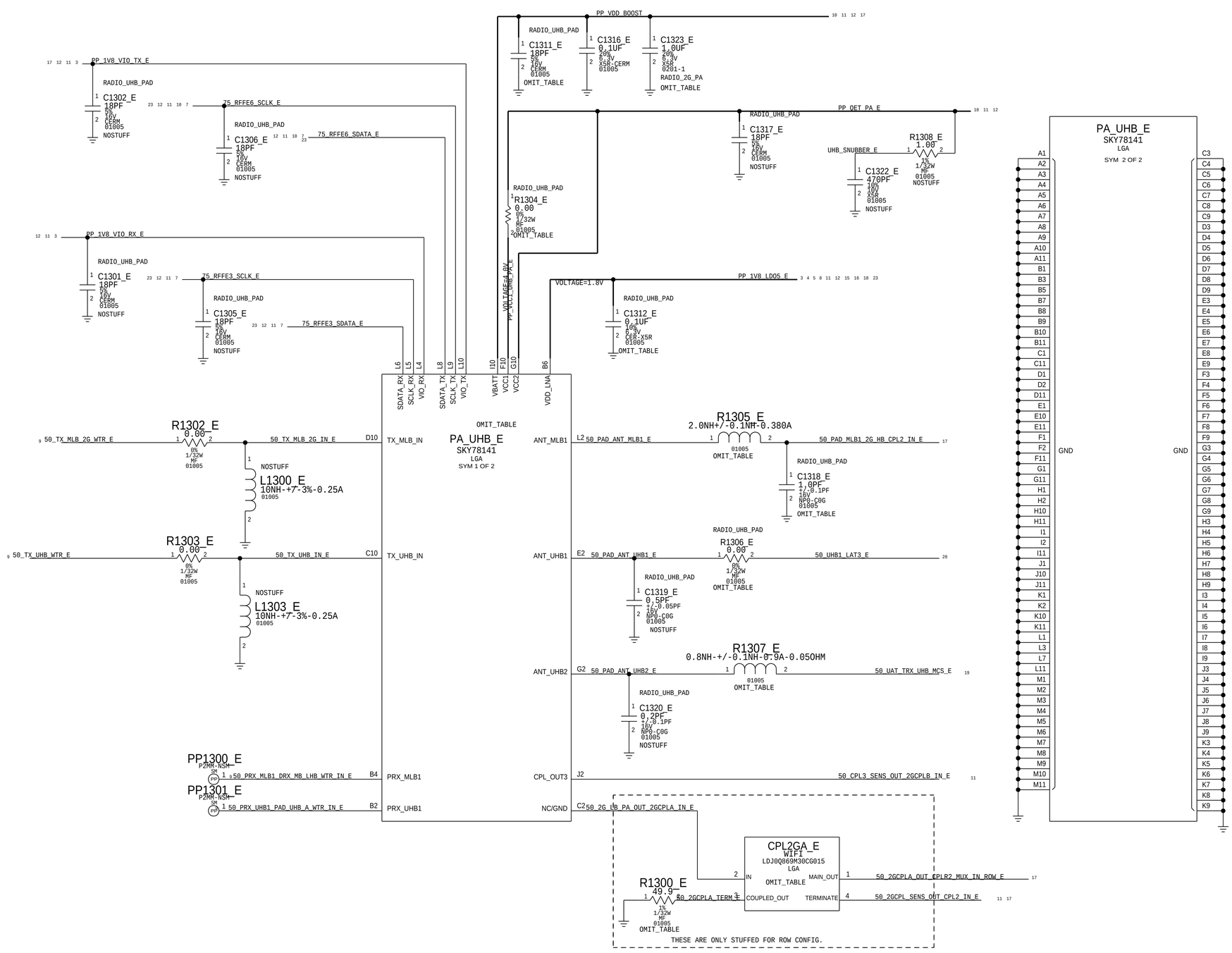

PAGE TITLE: UHB PAD

Apple Inc.

DRAWING NUMBER: 051-02222 SIZE: D

REVISION: 6.0.0

BRANCH: evt-1

PAGE: 13 OF 24

SHEET: 25 OF 41

NOTICE OF PROPRIETARY PROPERTY:
THE INFORMATION CONTAINED HEREIN IS THE PROPRIETARY PROPERTY OF APPLE INC.
THE POSESSOR AGREES TO THE FOLLOWING:
I TO MAINTAIN THIS DOCUMENT IN CONFIDENCE
II NOT TO REPRODUCE OR COPY IT
III NOT TO REVEAL OR PUBLISH IT IN WHOLE OR PART
IV ALL RIGHTS RESERVED

CONFIDENTIAL AND PROPRIETARY APPLE SYSTEM DESIGN. FOR REFERENCE ONLY - NOT A CHANGE REQUEST

2G PA - ROW

PART#	QTY	DESCRIPTION	REFERENCE DESIGNATOR(S)	CRITICAL	BOM OPTION
353S01247	1	2G PA MP	PA_UHB_E	CRITICAL	ROW
117S0161	1	MLB/2GTX IN MCH2, 0 OHMS	R1302_E	CRITICAL	ROW
117S0161	1	UHB INPUT MCH1, 0 OHMS	R1303_E	CRITICAL	ROW
152S1917	1	01005 2.0NH 0.6A	R1305_E	CRITICAL	ROW
117S0161	1	UHB2 OUT/DRX BP MCH1, 0 OHMS	R1307_E	CRITICAL	ROW
131S0214	1	VBAT DECOUPLING,18PF	C1311_E	CRITICAL	ROW
138S0692	1	VBAT DECOUPLING, 1UF	C1323_E	CRITICAL	ROW
117S0161	1	VCC2/VCC1 RESISTOR OPTION, 0 OHM	R1304_E	CRITICAL	ROW
155S00316	1	ROW CLPA	CPL2GA_E	CRITICAL	ROW
118S0652	1	01005 49.9R	R1300_E	CRITICAL	ROW

PAGE TITLE
2G PA

Apple Inc.

DRAWING NUMBER 051-02222
SIZE D
REVISION 6.0.0
BRANCH evt-1
PAGE 14 OF 24
SHEET 26 OF 41

NOTICE OF PROPRIETARY PROPERTY:
THE INFORMATION CONTAINED HEREIN IS THE PROPRIETARY PROPERTY OF APPLE INC.
THE POSESSOR AGREES TO THE FOLLOWING:
I TO MAINTAIN THIS DOCUMENT IN CONFIDENCE
II NOT TO REPRODUCE OR COPY IT
III NOT TO REVEAL OR PUBLISH IT IN WHOLE OR PART
IV ALL RIGHTS RESERVED

CONFIDENTIAL AND PROPRIETARY APPLE SYSTEM DESIGN. FOR REFERENCE ONLY - NOT A CHANGE REQUEST

LB DSM

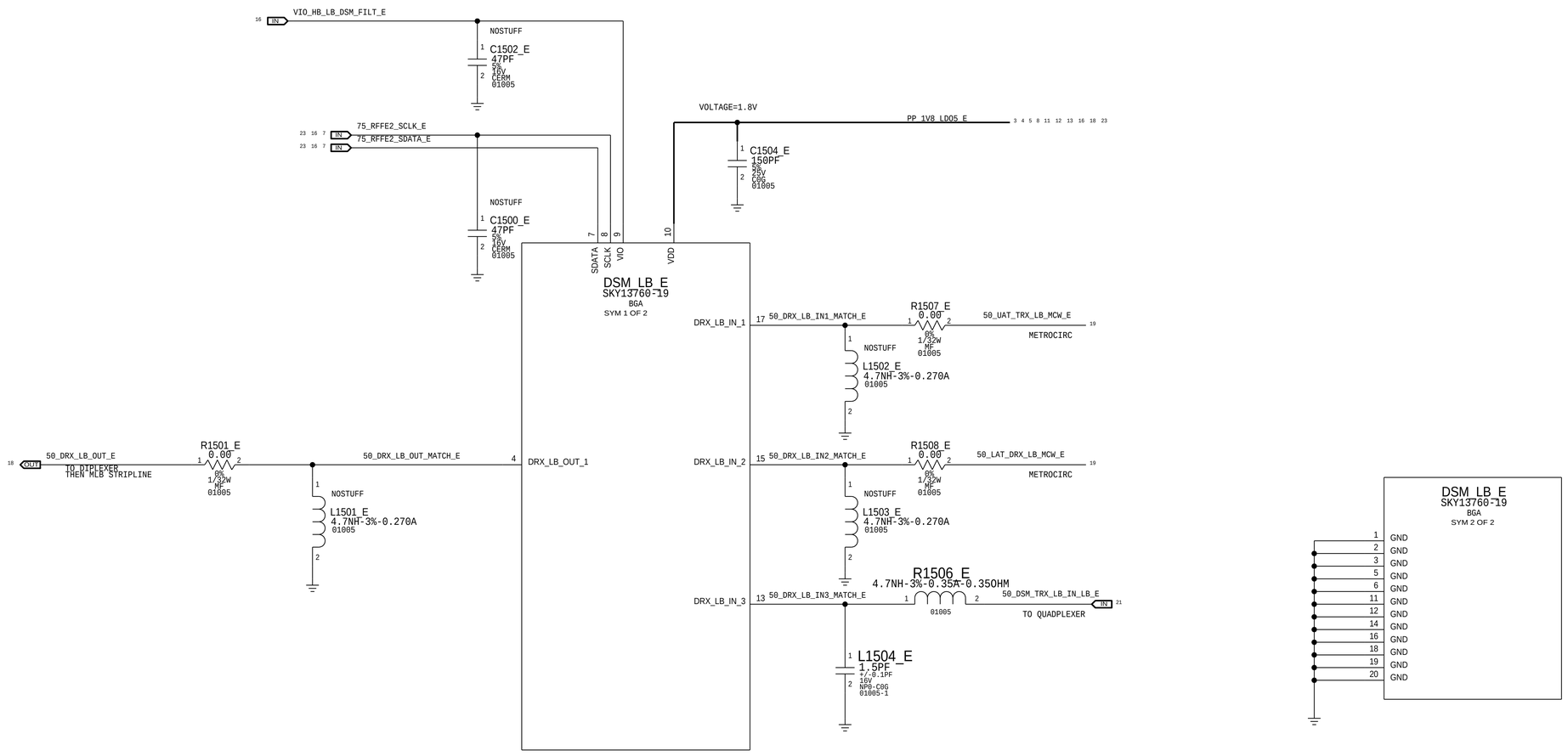

PAGE TITLE	LB DSM
Apple Inc.	
DRAWING NUMBER	051-02222
SIZE	D
REVISION	6.0.0
BRANCH	evt-1
PAGE	15 OF 24
SHEET	27 OF 41

NOTICE OF PROPRIETARY PROPERTY:
THE INFORMATION CONTAINED HEREIN IS THE PROPRIETARY PROPERTY OF APPLE INC.
THE POSESSOR AGREES TO THE FOLLOWING:
I TO MAINTAIN THIS DOCUMENT IN CONFIDENCE
II NOT TO REPRODUCE OR COPY IT
III NOT TO REVEAL OR PUBLISH IT IN WHOLE OR PART
IV ALL RIGHTS RESERVED

CONFIDENTIAL AND PROPRIETARY APPLE SYSTEM DESIGN. FOR REFERENCE ONLY - NOT A CHANGE REQUEST

HB DSM

DECOUPLING SHARED WITH LB DSM

PART#	QTY	DESCRIPTION	REFERENCE DESIGNATOR(S)	CRITICAL	BOM OPTION
117S0161	1	01005 0R	R1600_E	CRITICAL	ROW
117S0161	1	01005 0R	R1602_E	CRITICAL	ROW

PART#	QTY	DESCRIPTION	REFERENCE DESIGNATOR(S)	CRITICAL	BOM OPTION
117S0161	1	01005 0R	R1603_E	CRITICAL	JPN
117S0161	1	01005 0R	R1612_E	CRITICAL	JPN

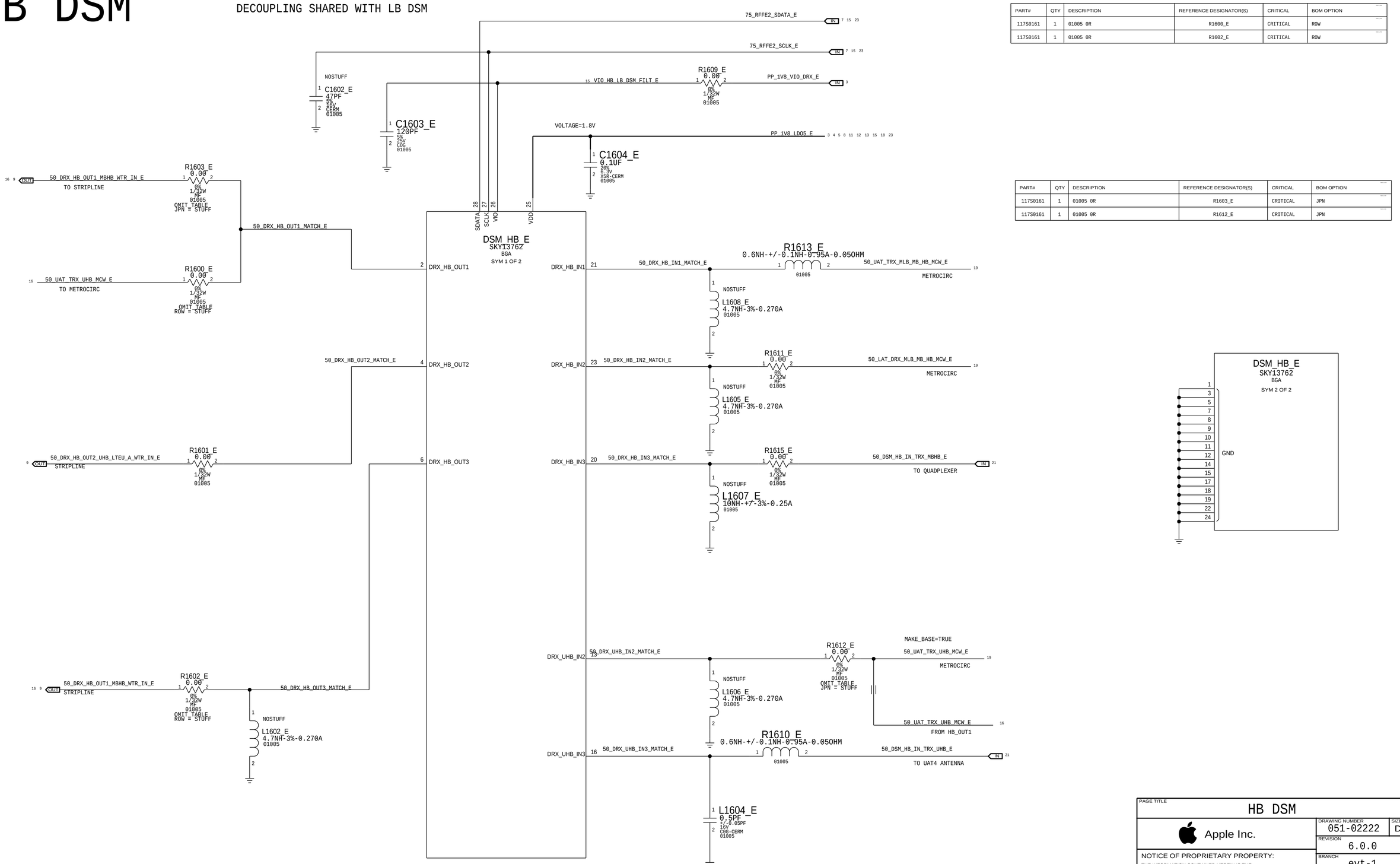

PAGE TITLE	HB DSM
Apple Inc.	
DRAWING NUMBER	051-02222
SIZE	D
REVISION	6.0.0
BRANCH	evt-1
PAGE	16 OF 24
SHEET	28 OF 41

NOTICE OF PROPRIETARY PROPERTY:
THE INFORMATION CONTAINED HEREIN IS THE PROPRIETARY PROPERTY OF APPLE INC.
THE POSESSOR AGREES TO THE FOLLOWING:
I TO MAINTAIN THIS DOCUMENT IN CONFIDENCE
II NOT TO REPRODUCE OR COPY IT
III NOT TO REVEAL OR PUBLISH IT IN WHOLE OR PART
IV ALL RIGHTS RESERVED

COUPLER2

CONFIDENTIAL AND PROPRIETARY APPLE SYSTEM DESIGN. FOR REFERENCE ONLY - NOT A CHANGE REQUEST

PART#	QTY	DESCRIPTION	REFERENCE DESIGNATOR(S)	CRITICAL	BOM OPTION
152S00504	1	01005 3.0NH 0.45A	R1809_E	CRITICAL	JPN
152S00524	1	01005 7N5H 300MA	C1813_E	CRITICAL	JPN
131S0249	1	01005 2.2PF 0.1PF	C1815_E	CRITICAL	JPN
131S0249	1	01005 2.2PF 0.1PF	C1802_E	CRITICAL	JPN

PART#	QTY	DESCRIPTION	REFERENCE DESIGNATOR(S)	CRITICAL	BOM OPTION
117S0161	1	01005 0R	R1810_E	CRITICAL	ROW
117S0161	1	01005 0R	C1814_E	CRITICAL	ROW

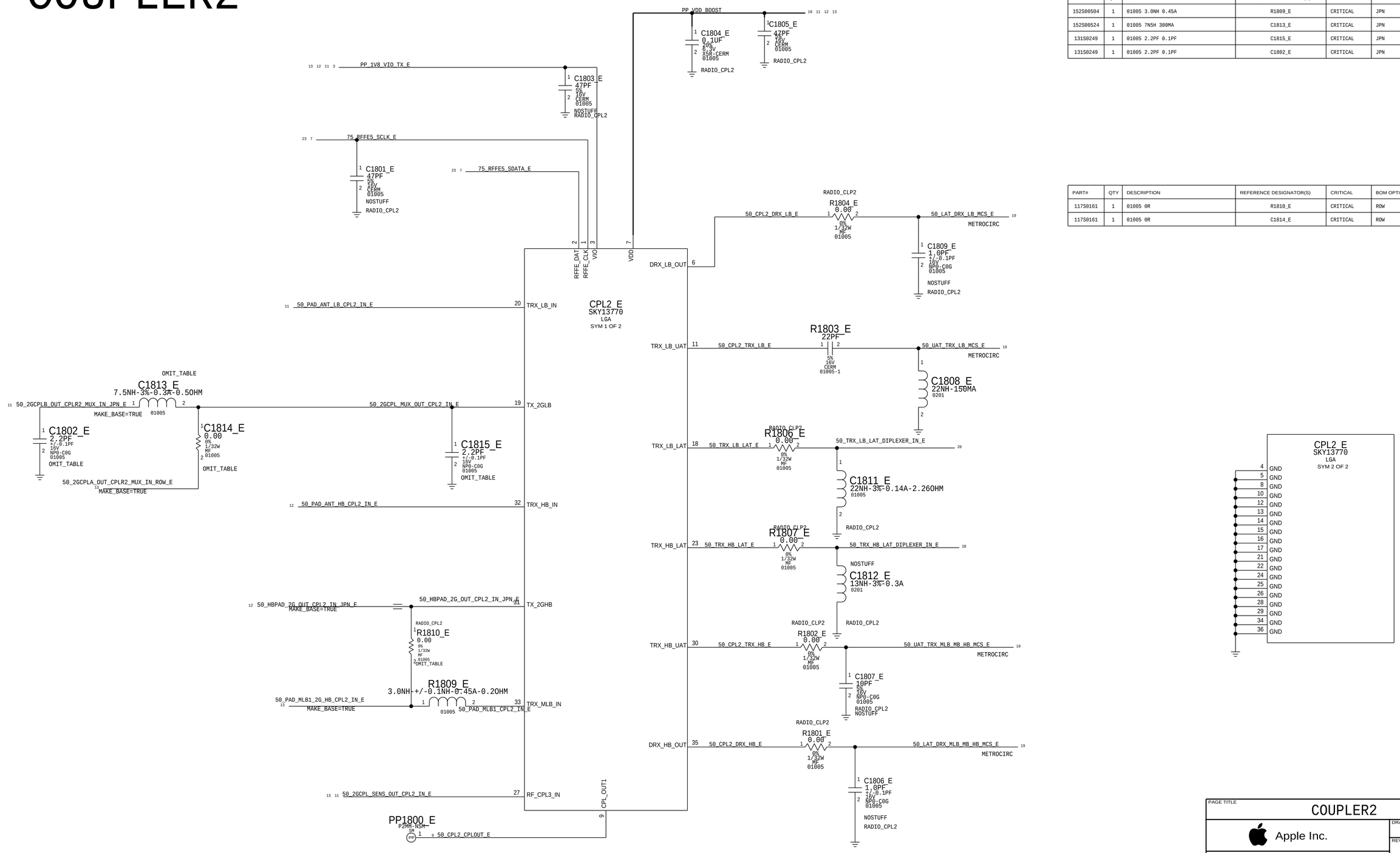

PAGE TITLE	COUPLER2
	Apple Inc.
DRAWING NUMBER	051-02222
SIZE	D
REVISION	6.0.0
BRANCH	evt-1
PAGE	17 OF 24
SHEET	29 OF 41

NOTICE OF PROPRIETARY PROPERTY:
THE INFORMATION CONTAINED HEREIN IS THE PROPRIETARY PROPERTY OF APPLE INC.
THE POSESSOR AGREES TO THE FOLLOWING:
I TO MAINTAIN THIS DOCUMENT IN CONFIDENCE
II NOT TO REPRODUCE OR COPY IT
III NOT TO REVEAL OR PUBLISH IT IN WHOLE OR PART
IV ALL RIGHTS RESERVED

GPS & GPS/LB DIPLEXER

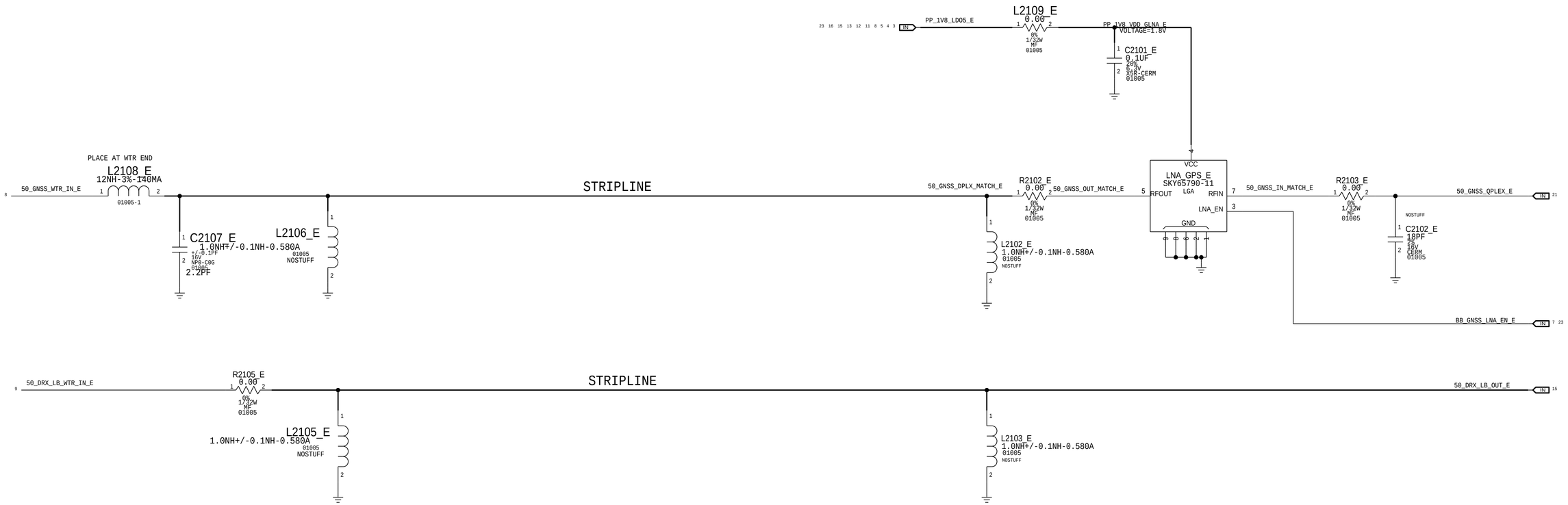

PAGE TITLE	GNSS
	Apple Inc.
DRAWING NUMBER	051-02222
SIZE	D
REVISION	6.0.0
BRANCH	evt-1
PAGE	18 OF 24
SHEET	30 OF 41

NOTICE OF PROPRIETARY PROPERTY:
THE INFORMATION CONTAINED HEREIN IS THE PROPRIETARY PROPERTY OF APPLE INC.
THE POSESSOR AGREES TO THE FOLLOWING:
I TO MAINTAIN THIS DOCUMENT IN CONFIDENCE
II NOT TO REPRODUCE OR COPY IT
III NOT TO REVEAL OR PUBLISH IT IN WHOLE OR PART
IV ALL RIGHTS RESERVED

CONFIDENTIAL AND PROPRIETARY APPLE SYSTEM DESIGN. FOR REFERENCE ONLY - NOT A CHANGE REQUEST

METROCIRC

CONFIDENTIAL AND PROPRIETARY APPLE SYSTEM DESIGN. FOR REFERENCE ONLY - NOT A CHANGE REQUEST

METROCIRC

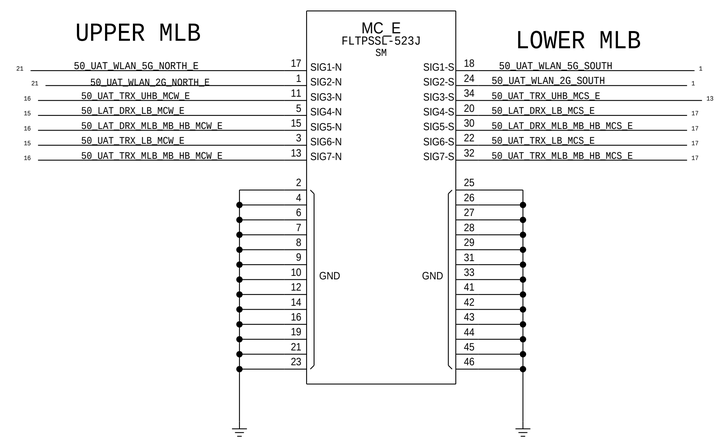

PAGE TITLE
METROCIRC

Apple Inc.

DRAWING NUMBER 051-02222
SIZE D
REVISION 6.0.0
BRANCH evt-1
PAGE 19 OF 24
SHEET 31 OF 41

NOTICE OF PROPRIETARY PROPERTY:
THE INFORMATION CONTAINED HEREIN IS THE PROPRIETARY PROPERTY OF APPLE INC.
THE POSESSOR AGREES TO THE FOLLOWING:
I TO MAINTAIN THIS DOCUMENT IN CONFIDENCE
II NOT TO REPRODUCE OR COPY IT
III NOT TO REVEAL OR PUBLISH IT IN WHOLE OR PART
IV ALL RIGHTS RESERVED

LOWER ANTENNA

CONFIDENTIAL AND PROPRIETARY APPLE SYSTEM DESIGN. FOR REFERENCE ONLY - NOT A CHANGE REQUEST

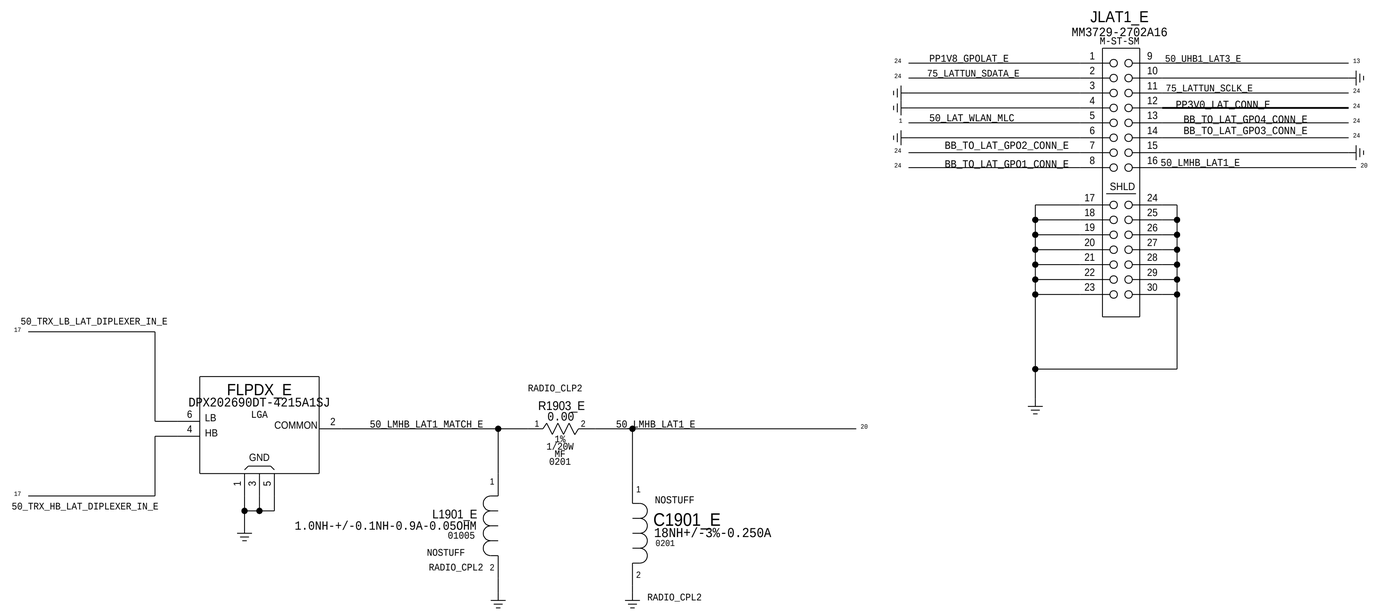

PAGE TITLE	LOWER ANTENNA
Apple Inc.	DRAWING NUMBER 051-02222 SIZE D
	REVISION 6.0.0
	BRANCH evt-1
	PAGE 20 OF 24
	SHEET 32 OF 41

NOTICE OF PROPRIETARY PROPERTY:
THE INFORMATION CONTAINED HEREIN IS THE PROPRIETARY PROPERTY OF APPLE INC.
THE POSESSOR AGREES TO THE FOLLOWING:
I TO MAINTAIN THIS DOCUMENT IN CONFIDENCE
II NOT TO REPRODUCE OR COPY IT
III NOT TO REVEAL OR PUBLISH IT IN WHOLE OR PART
IV ALL RIGHTS RESERVED

UAT & LB/UHB DIPLEXER

CONFIDENTIAL AND PROPRIETARY APPLE SYSTEM DESIGN. FOR REFERENCE ONLY - NOT A CHANGE REQUEST

PART#	QTY	DESCRIPTION	REFERENCE DESIGNATOR(S)	CRITICAL	BOM OPTION
155S00280	1	B42_WIFI5_DPX	FL2002_E	CRITICAL	JPN
155S00290	1	B42_WIFI5_DPX_PASSTHRU	FL2002_E	CRITICAL	ROW

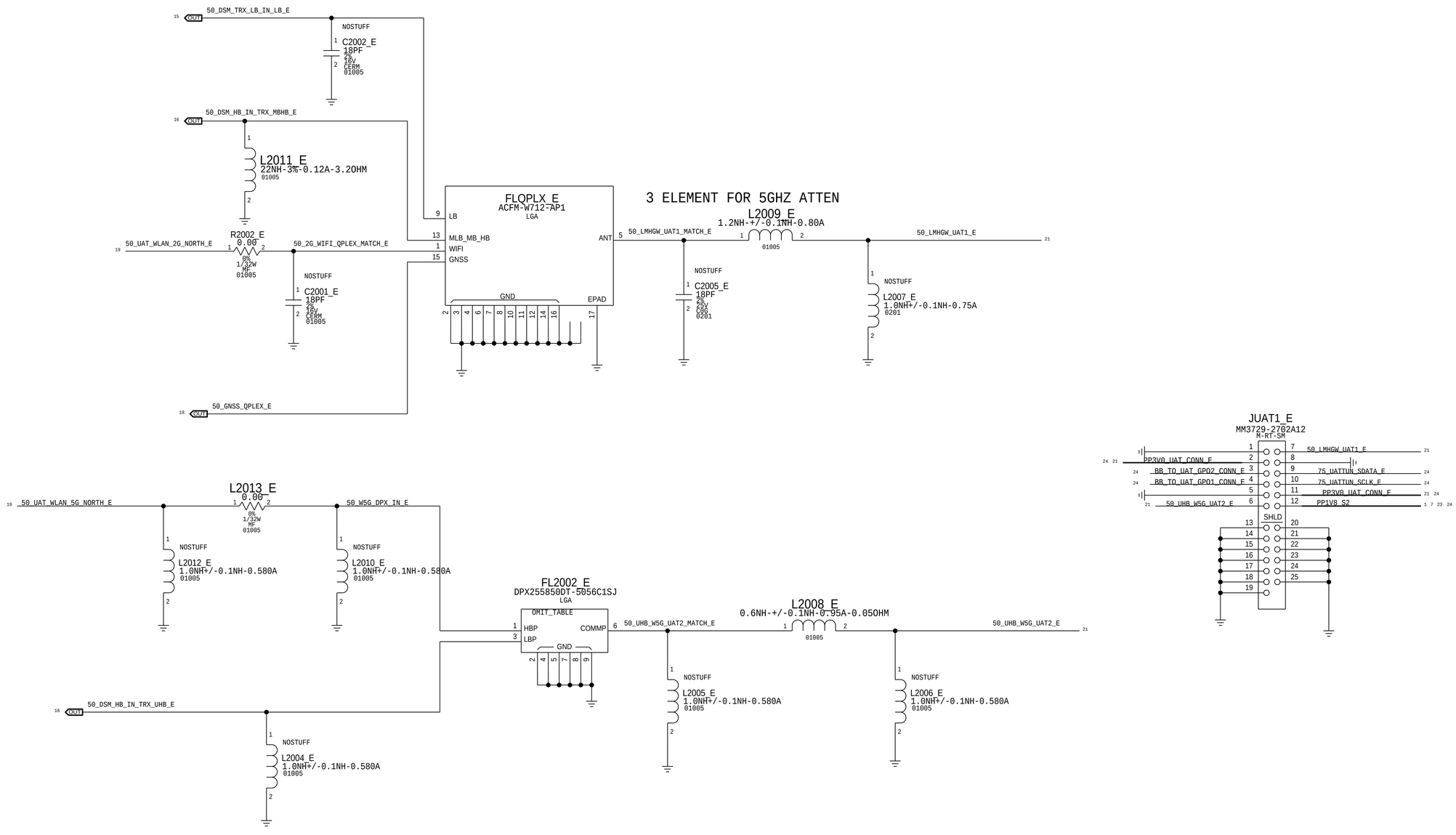

PAGE TITLE

UPPER ANTENNA

Apple Inc.

DRAWING NUMBER 051-02222 SIZE D

REVISION 6.0.0

BRANCH evt-1

PAGE 21 OF 24

SHEET 33 OF 41

NOTICE OF PROPRIETARY PROPERTY:

THE INFORMATION CONTAINED HEREIN IS THE PROPRIETARY PROPERTY OF APPLE INC.
THE POSESSOR AGREES TO THE FOLLOWING:
I TO MAINTAIN THIS DOCUMENT IN CONFIDENCE
II NOT TO REPRODUCE OR COPY IT
III NOT TO REVEAL OR PUBLISH IT IN WHOLE OR PART
IV ALL RIGHTS RESERVED

SIM CONN EUICC & DEBUG CONN

CONFIDENTIAL AND PROPRIETARY APPLE SYSTEM DESIGN. FOR REFERENCE ONLY - NOT A CHANGE REQUEST

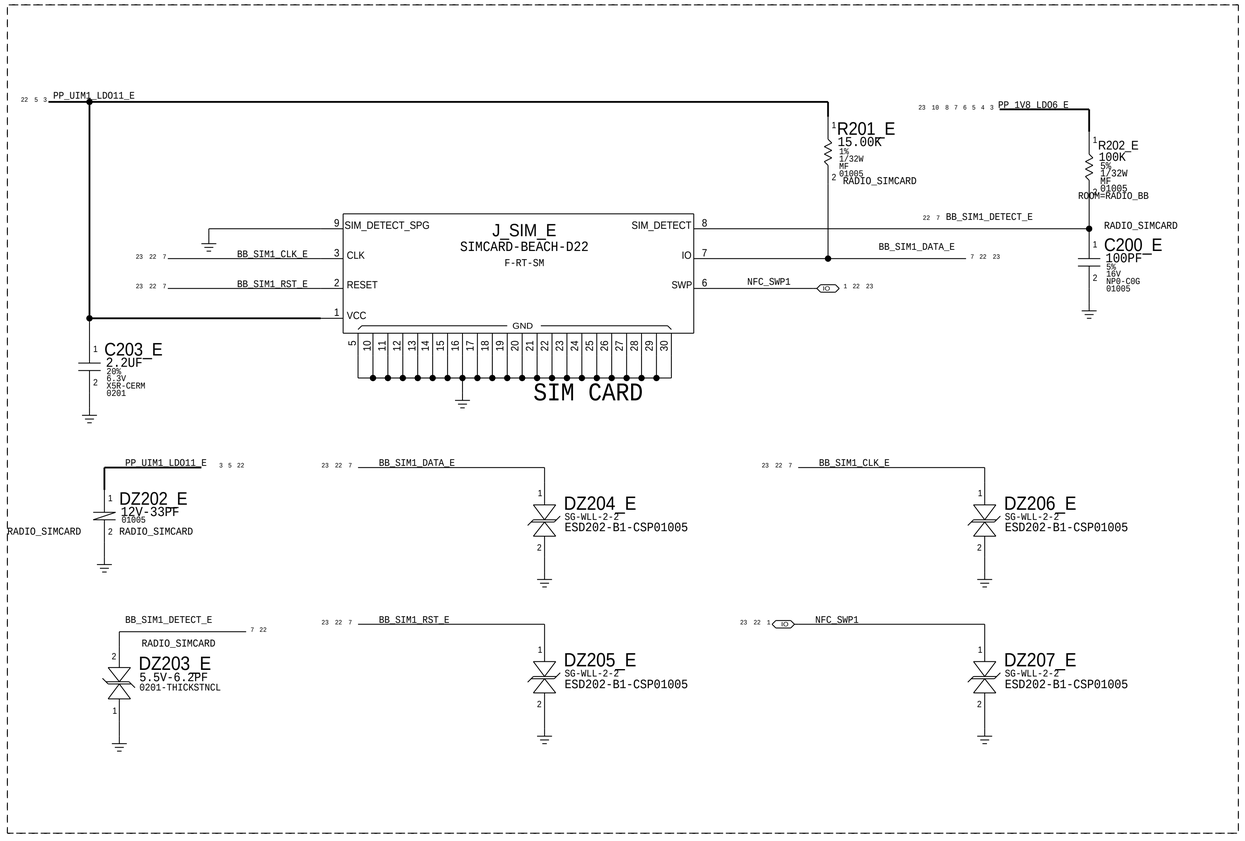

DEBUG CONNECTOR

MLB, 516S1185
FLEX 516S1184

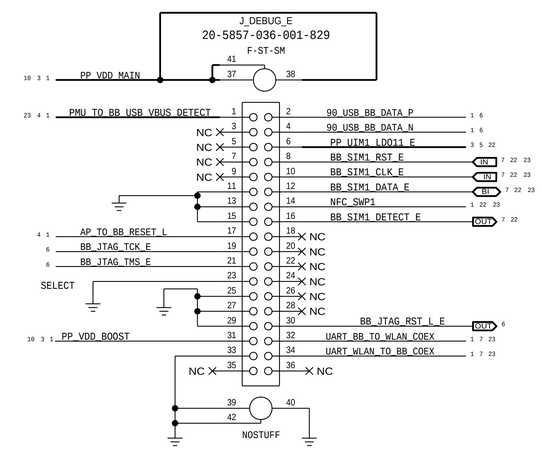

SYNC_MASTER=SIM TRAY SYNC_DATE=07/05/2016

PAGE TITLE
SIM, EUICC, DEBUG CONN

Apple Inc.

DRAWING NUMBER 051-02222 SIZE D
REVISION 6.0.0
BRANCH evt-1
PAGE 22 OF 24
SHEET 34 OF 41

NOTICE OF PROPRIETARY PROPERTY:
THE INFORMATION CONTAINED HEREIN IS THE PROPRIETARY PROPERTY OF APPLE INC.
THE POSESSOR AGREES TO THE FOLLOWING:
I TO MAINTAIN THIS DOCUMENT IN CONFIDENCE
II NOT TO REPRODUCE OR COPY IT
III NOT TO REVEAL OR PUBLISH IT IN WHOLE OR PART
IV ALL RIGHTS RESERVED

BB PROBE POINTS

PP101_E P2MM-NSM SM PP 1 BB_TO_PMU_PCIE_HOST_WAKE_L 1 7
PP87_E P2MM-NSM SM PP 1 PCIE_BB_BI_AP_CLKREQ_L 1 7
PP88_E P2MM-NSM SM PP 1 PCIE_AP_TO_BB_RESET_L 1 7

PCIE

LAYOUT: VIA STUB AT BB PINS

PP1_E P2MM-NSM SM PP 1 90_PCIE_AP_TO_BB_REFCLK_P 1 6
PP2_E P2MM-NSM SM PP 1 90_PCIE_AP_TO_BB_REFCLK_N 1 6
PP3_E P2MM-NSM SM PP 1 90_PCIE_AP_TO_BB_TXD_P 1 6
PP4_E P2MM-NSM SM PP 1 90_PCIE_AP_TO_BB_TXD_N 1 6

LAYOUT: VIA STUB AT PADS

PP5_E P2MM-NSM SM PP 1 90_PCIE_BB_TO_AP_RXD_P 1 6
PP6_E P2MM-NSM SM PP 1 90_PCIE_BB_TO_AP_RXD_N 1 6

PWR

PP73_E P2MM-NSM SM PP 1 PP_0V8_SMPS1_E 3 5
PP77_E P2MM-NSM SM PP 1 PP_0V8_SMPS5_E 3 5
PP78_E P2MM-NSM SM PP 1 PP_1V2_LDO1_E 3 8 12
PP79_E P2MM-NSM SM PP 1 PP_1V2_LDO2_E 3 5
PP80_E P2MM-NSM SM PP 1 PP_1V0_LDO3_E 3 8
PP81_E P2MM-NSM SM PP 1 PP_0V9_LDO4_E 3 5
PP82_E P2MM-NSM SM PP 1 PP_1V8_LDO5_E 3 4 5 8 11 12 13 15 16 18
PP83_E P2MM-NSM SM PP 1 PP_1V8_LDO6_E 3 4 5 6 7 8 10 22
PP84_E P2MM-NSM SM PP 1 PP_1V0_LDO8_E 3 8
PP85_E P2MM-NSM SM PP 1 PP_0V8_LDO9_E 3 5
PP89_E P2MM-NSM SM PP 1 PP1V8_S2 1 7 21 24
PP90_E P2MM-NSM SM PP 1 PP3V0_S2 1 24

SIM

PP13_E P2MM-NSM SM PP 1 BB_SIM1_RST_E 7 22
PP14_E P2MM-NSM SM PP 1 BB_SIM1_CLK_E 7 22
PP15_E P2MM-NSM SM PP 1 BB_SIM1_DATA_E 7 22
PP16_E P2MM-NSM SM PP 1 NFC_SWP1 1 22
PP104_E P2MM-NSM SM PP 1 BB_SIM1_REMOVAL_ALARM_E 4 7

I2C

PP95_E P2MM-NSM SM PP 1 BB_EEPROM_I2C_SDA_E 7
PP96_E P2MM-NSM SM PP 1 BB_EEPROM_I2C_SCL_E 7

UART

PP31_E P2MM-NSM SM PP 1 UART_BB_TO_AOP_RXD 1 7
PP24_E P2MM-NSM SM PP 1 UART_AOP_TO_BB_TXD 1 7

SPMI

PP57_E P2MM-NSM SM PP 1 SPMI_CLK_E 4 6
PP58_E P2MM-NSM SM PP 1 SPMI_DATA_E 4 6

I2S

PP25_E P2MM-NSM SM PP 1 I2S_BB_TO_AP_LRCLK 1 7
PP26_E P2MM-NSM SM PP 1 I2S_BB_TO_AP_BCLK 1 7
PP27_E P2MM-NSM SM PP 1 I2S_AP_TO_BB_DOUT 1 7
PP28_E P2MM-NSM SM PP 1 I2S_BB_TO_AP_DIN 1 7

PWR SEQ

PP18_E P2MM-NSM SM PP 1 PMIC_RESOUT_L_E 4 6
PP20_E P2MM-NSM SM PP 1 BB_TO_AP_RESET_DETECT_L 1 7
PP92_E P2MM-NSM SM PP 1 PMU_TO_BBPMU_RESET_L 1 4
PP93_E P2MM-NSM SM PP 1 PS_HOLD_E 4 6
PP94_E P2MM-NSM SM PP 1 PS_HOLD_PMIC_E 4

CTRL

PP98_E P2MM-NSM SM PP 1 FAST_BOOT_SELECT0_E 7
PP99_E P2MM-NSM SM PP 1 FAST_BOOT_SELECT1_E 7
PP100_E P2MM-NSM SM PP 1 AP_TO_BB_IPC_GPIO1 1 7
PP23_E P2MM-NSM SM PP 1 BB_GNSS_LNA_EN_E 7 18
PP29_E P2MM-NSM SM PP 1 AP_TO_BB_TIME_MARK 1 7
PP30_E P2MM-NSM SM PP 1 BB_TO_STROBE_DRIVER_GSM_BURST_IND 7 7
PP107_E P2MM-NSM SM PP 1 WMSS_RESET_L_E 7 8

DEBUG

PP105_E P2MM-NSM SM PP 1 SWD_AOP_TO_MANY_SWCLK 1 6
PP106_E P2MM-NSM SM PP 1 SWD_AOP_BI_BB_SWDIO 1 6
PP22_E P2MM-NSM SM PP 1 AP_TO_BB_COREDUMP 1 7
PP10_E P2MM-NSM SM PP 1 PMU_TO_BB_USB_VBUS_DETECT 1 4 22

COEX

22 7 1 UART_BB_TO_WLAN_COEX — PP701_E P2MM-NSM SM PP 1
22 7 1 UART_WLAN_TO_BB_COEX — PP702_E P2MM-NSM SM PP 1

BASEBAND

CLK

PP34_E P2MM-NSM SM PP 1 50_MDM_19P2M_CLK_E 4 6
PP35_E P2MM-NSM SM PP 1 50_WTR_38P4M_CLK_E 4 8
PP36_E P2MM-NSM SM PP 1 XO_OUT_D0_EN_E 4 6
PP32_E P2MM-NSM SM PP 1 50_SLEEP_CLK_32K_E 4 6
P402_E P2MM-NSM SM PP 1 BB_TO_NFC_CLK 1 4

RFFE

P801_E P2MM-NSM SM PP 1 75_RFFE1_SCLK_E 7 8 23 24
P802_E P2MM-NSM SM PP 1 75_RFFE1_SDATA_E 7 8 23 24
PP37_E P2MM-NSM SM PP 1 75_RFFE2_SDATA_E 7 15 16 23
PP39_E P2MM-NSM SM PP 1 75_RFFE2_SCLK_E 7 15 16 23
PP40_E P2MM-NSM SM PP 1 75_RFFE3_SDATA_E 7 11 12 13 23
PP41_E P2MM-NSM SM PP 1 75_RFFE3_SCLK_E 7 11 12 13 23
PP42_E P2MM-NSM SM PP 1 75_RFFE4_SDATA_E 7 23 24
PP43_E P2MM-NSM SM PP 1 75_RFFE4_SCLK_E 7 23 24
PP38_E P2MM-NSM SM PP 1 75_RFFE5_SDATA_E 7 17 23
PP44_E P2MM-NSM SM PP 1 75_RFFE5_SCLK_E 7 17 23
PP45_E P2MM-NSM SM PP 1 75_RFFE6_SDATA_E 7 10 11 12 13 23
PP46_E P2MM-NSM SM PP 1 75_RFFE6_SCLK_E 7 10 11 12 13 23

RFFE BB

PP108_E P2MM-NSM SM PP 1 75_RFFE1_SDATA_E 7 8 23 24
PP111_E P2MM-NSM SM PP 1 75_RFFE1_SCLK_E 7 8 23 24
PP109_E P2MM-NSM SM PP 1 75_RFFE2_SDATA_E 7 15 16 23
PP112_E P2MM-NSM SM PP 1 75_RFFE2_SCLK_E 7 15 16 23
PP110_E P2MM-NSM SM PP 1 75_RFFE4_SDATA_E 7 23 24
PP113_E P2MM-NSM SM PP 1 75_RFFE4_SCLK_E 7 23 24

QLINK

LAYOUT: VIA STUB AT WTR PINS

PP53_E P2MM-NSM SM PP 1 QLINK_UL0_P_E 7 8
PP54_E P2MM-NSM SM PP 1 QLINK_UL0_N_E 7 8
PP55_E P2MM-NSM SM PP 1 QLINK_CLK_P_E 7 8
PP56_E P2MM-NSM SM PP 1 QLINK_CLK_N_E 7 8

LAYOUT: VIA STUB AT BB PINS

PP47_E P2MM-NSM SM PP 1 QLINK_DL0_P_E 7 8
PP48_E P2MM-NSM SM PP 1 QLINK_DL0_N_E 7 8
PP49_E P2MM-NSM SM PP 1 QLINK_DL1_P_E 7 8
PP50_E P2MM-NSM SM PP 1 QLINK_DL1_N_E 7 8
PP51_E P2MM-NSM SM PP 1 QLINK_DL2_P_E 7 8
PP52_E P2MM-NSM SM PP 1 QLINK_DL2_N_E 7 8
P803_E P2MM-NSM SM PP 1 QLINK_REQ_W0_E 7 8
P804_E P2MM-NSM SM PP 1 QLINK_EN_W0_E 7 8

RFFE PA/LNA

PP114_E P2MM-NSM SM PP 1 75_RFFE3_SDATA_E 7 11 12 13 23
PP117_E P2MM-NSM SM PP 1 75_RFFE3_SCLK_E 7 11 12 13 23
PP116_E P2MM-NSM SM PP 1 75_RFFE3_SDATA_E 7 11 12 13 23
PP119_E P2MM-NSM SM PP 1 75_RFFE3_SCLK_E 7 11 12 13 23
PP126_E P2MM-NSM SM PP 1 75_RFFE6_SDATA_E 7 10 11 12 13 23
PP128_E P2MM-NSM SM PP 1 75_RFFE6_SCLK_E 7 10 11 12 13 23

RFFE CPL

PP127_E P2MM-NSM SM PP 1 75_RFFE5_SDATA_E 7 17 23
PP129_E P2MM-NSM SM PP 1 75_RFFE5_SCLK_E 7 17 23

SYNC_MASTER=PROBE_POINTS SYNC_DATE=07/06/2016
PAGE TITLE: TEST POINTS

Apple Inc.

DRAWING NUMBER	051-02222
SIZE	D
REVISION	6.0.0
BRANCH	evt-1
PAGE	23 OF 24
SHEET	35 OF 41

NOTICE OF PROPRIETARY PROPERTY:
THE INFORMATION CONTAINED HEREIN IS THE PROPRIETARY PROPERTY OF APPLE INC.
THE POSESSOR AGREES TO THE FOLLOWING:
I TO MAINTAIN THIS DOCUMENT IN CONFIDENCE
II NOT TO REPRODUCE OR COPY IT
III NOT TO REVEAL OR PUBLISH IT IN WHOLE OR PART
IV ALL RIGHTS RESERVED

CONFIDENTIAL AND PROPRIETARY APPLE SYSTEM DESIGN. FOR REFERENCE PURPOSE ONLY - NOT A CHANGE REQUEST

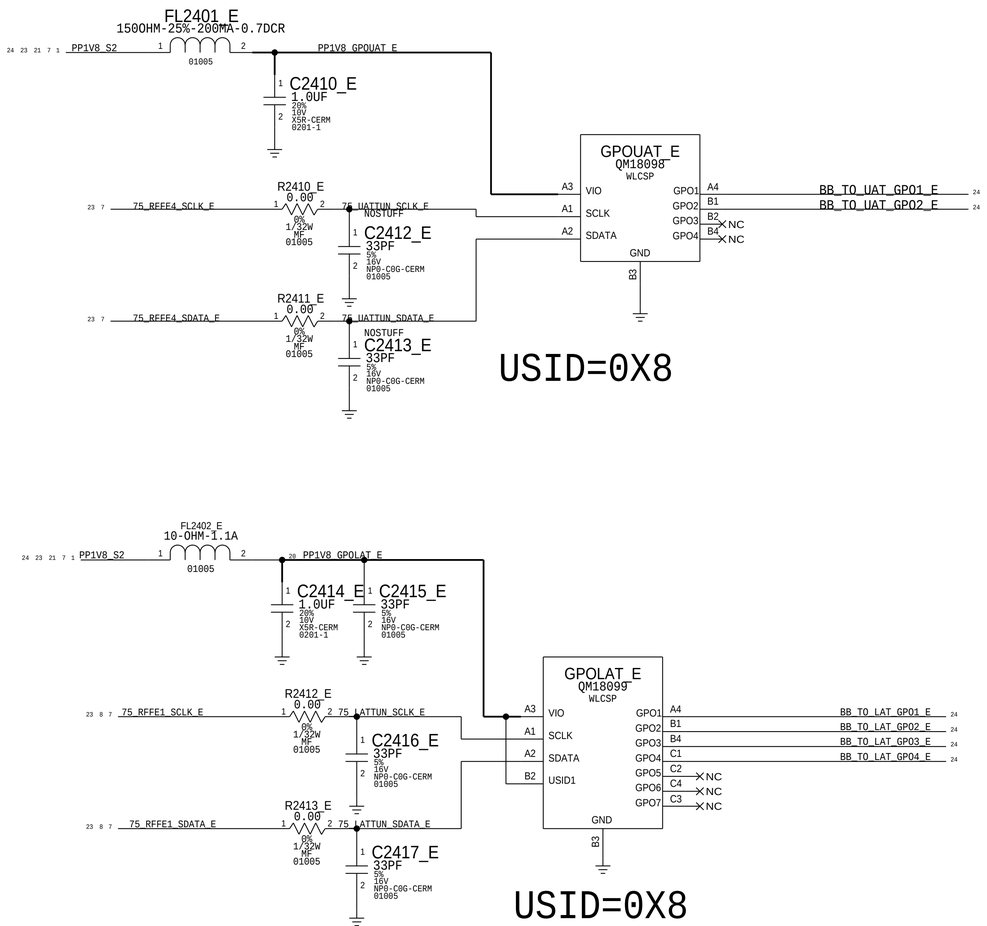

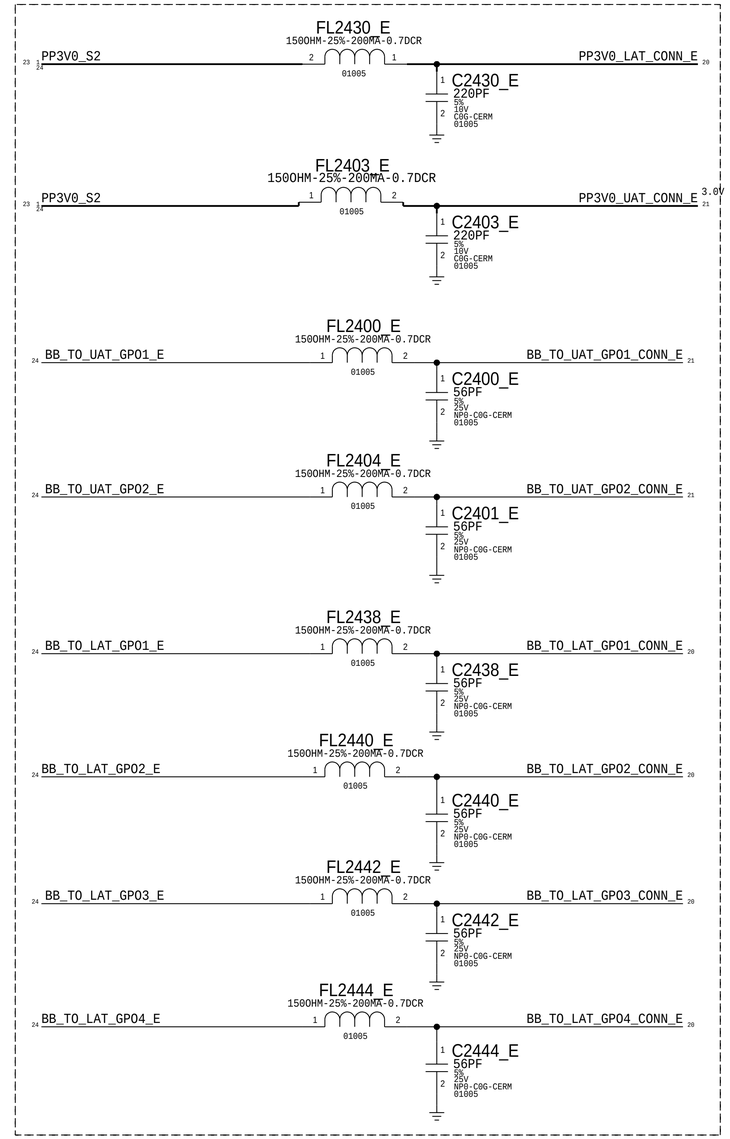

PAGE TITLE
RFFE TO GPO TRANSLATOR

Apple Inc.

DRAWING NUMBER	051-02222
SIZE	D
REVISION	6.0.0
BRANCH	evt-1
PAGE	24 OF 24
SHEET	36 OF 41

NOTICE OF PROPRIETARY PROPERTY:
THE INFORMATION CONTAINED HEREIN IS THE PROPRIETARY PROPERTY OF APPLE INC.
THE POSESSOR AGREES TO THE FOLLOWING:
I TO MAINTAIN THIS DOCUMENT IN CONFIDENCE
II NOT TO REPRODUCE OR COPY IT
III NOT TO REVEAL OR PUBLISH IT IN WHOLE OR PART
IV ALL RIGHTS RESERVED

1. ALL RESISTANCE VALUES ARE IN OHMS, 0.1 WATT +/- 5%.
2. ALL CAPACITANCE VALUES ARE IN MICROFARADS.
3. ALL CRYSTALS & OSCILLATOR VALUES ARE IN HERTZ.

REV	ECN	DESCRIPTION OF REVISION	CK APPD / DATE
6	0008416016	ENGINEERING RELEASED	2017-04-06

D22 NFC_MLB
MARCH 22, 2017

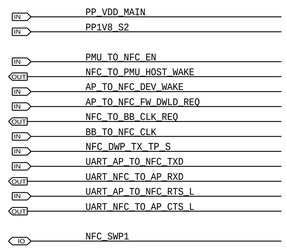

PART#	QTY	DESCRIPTION	REFERENCE DESIGNATOR(S)	CRITICAL	BOM OPTION
138S00159	3	CAP,SOFT-TERM,2.2UF,6.3V,0201	C7500_S,C7502_S,C7505_S	CRITICAL	SOFT_CAP
138S0831	3	CAP,TYPICAL,2.2UF,6.3V,0201	C7500_S,C7502_S,C7505_S	CRITICAL	TYPICAL_CAP

page1

DRAWING TITLE
SCH,MLB,BOT,X891

Apple Inc.

DRAWING NUMBER 051-02222
SIZE D
REVISION 6.0.0
BRANCH evt-1
PAGE 1 OF 75
SHEET 37 OF 41

NOTICE OF PROPRIETARY PROPERTY:
THE INFORMATION CONTAINED HEREIN IS THE PROPRIETARY PROPERTY OF APPLE INC.
THE POSESSOR AGREES TO THE FOLLOWING:
I TO MAINTAIN THIS DOCUMENT IN CONFIDENCE
II NOT TO REPRODUCE OR COPY IT
III NOT TO REVEAL OR PUBLISH IT IN WHOLE OR PART
IV ALL RIGHTS RESERVED

STOCKHOLM

5V BOOSTER

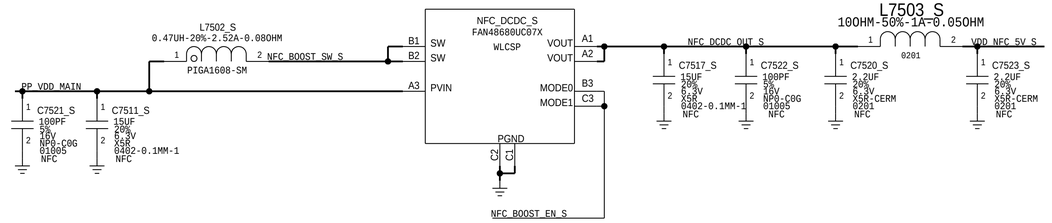

NFC CONTROLLER

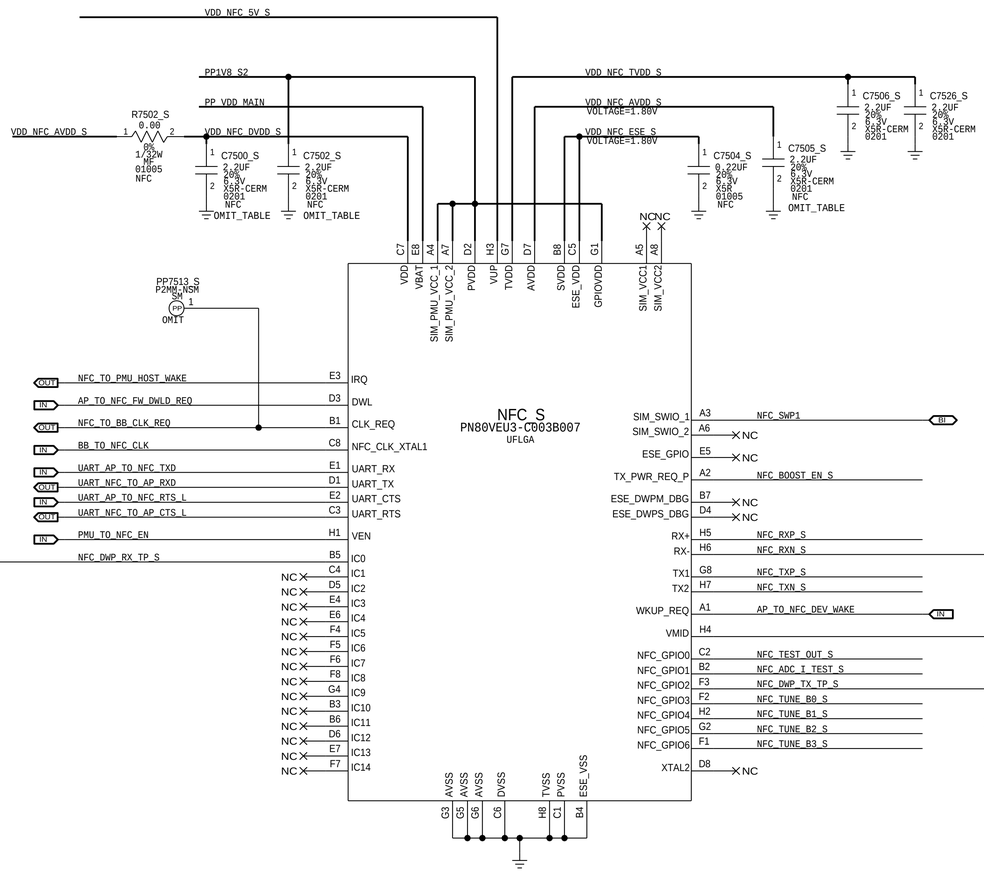

NFC FRONT END

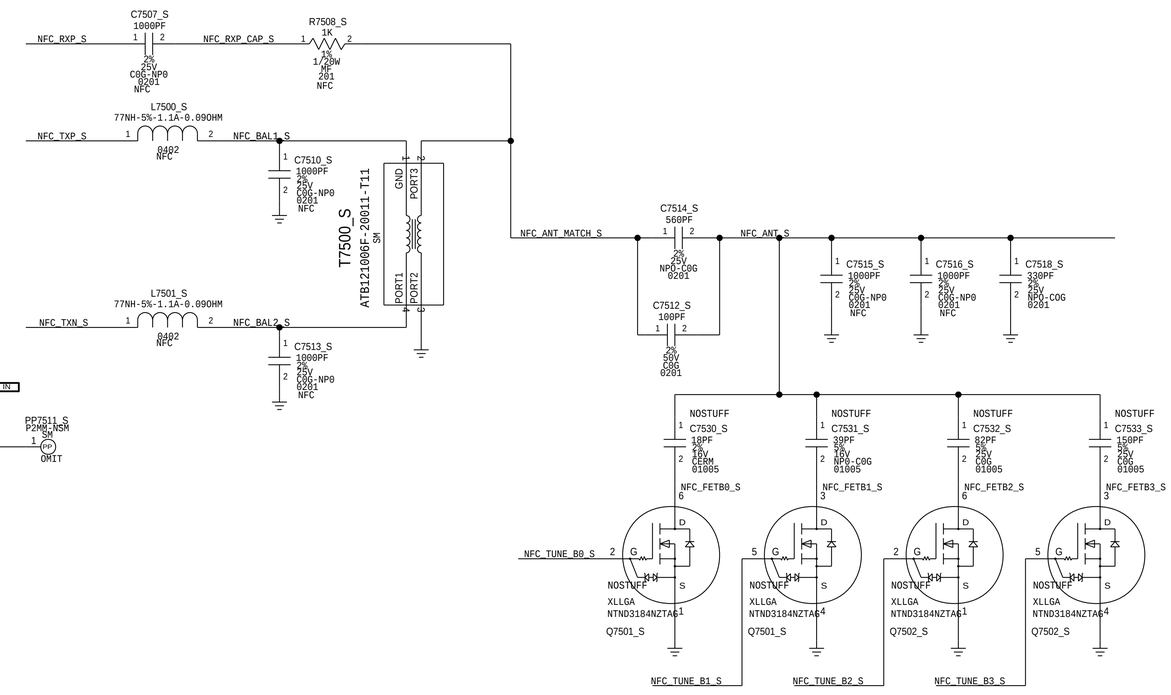

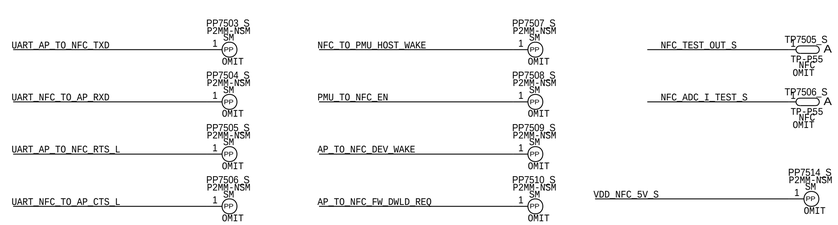

PAGE TITLE	NFC
Apple Inc.	DRAWING NUMBER 051-02222 SIZE D
	REVISION 6.0.0
	BRANCH evt-1
	PAGE 75 OF 75
	SHEET 38 OF 41

NOTICE OF PROPRIETARY PROPERTY:
THE INFORMATION CONTAINED HEREIN IS THE PROPRIETARY PROPERTY OF APPLE INC.
THE POSESSOR AGREES TO THE FOLLOWING:
I TO MAINTAIN THIS DOCUMENT IN CONFIDENCE
II NOT TO REPRODUCE OR COPY IT
III NOT TO REVEAL OR PUBLISH IT IN WHOLE OR PART
IV ALL RIGHTS RESERVED

1. ALL RESISTANCE VALUES ARE IN OHMS, 0.1 WATT +/- 5%.
2. ALL CAPACITANCE VALUES ARE IN MICROFARADS.
3. ALL CRYSTALS & OSCILLATOR VALUES ARE IN HERTZ.

REV	ECN	DESCRIPTION OF REVISION	CK APPD / DATE
6	0008416016	ENGINEERING RELEASED	2017-04-06

D22/D221 WIFI_MLB (GUINNESS)
APR 03, 2017

PDF PAGE	CSA PAGE	CONTENTS
2	76	GUINNESS
3	77	WIFI FRONT-END

POWER
2 IN PP_VDD_MAIN
2 IN PP1V8_S2

CLOCKS
2 IN PMU_TO_WLAN_CLK32K
2 IN WLAN_TO_AP_TIME_SYNC

CONTROL
2 IN PMU_TO_WLAN_REG_ON
2 IN PMU_TO_BT_REG_ON
2 OUT BT_TO_PMU_HOST_WAKE
2 IN AP_TO_BT_WAKE

WLAN PCIE
2 IN 90_PCIE_AP_TO_WLAN_REFCLK_P
2 IN 90_PCIE_AP_TO_WLAN_REFCLK_N
2 IN 90_PCIE_AP_TO_WLAN_TXD_P
2 IN 90_PCIE_AP_TO_WLAN_TXD_N
2 OUT 90_PCIE_WLAN_TO_AP_RXD_P
2 OUT 90_PCIE_WLAN_TO_AP_RXD_N
2 IN PCIE_AP_TO_WLAN_RESET_L
2 IO PCIE_WLAN_BI_AP_CLKREQ_L
2 OUT WLAN_TO_PMU_HOST_WAKE
2 IN AP_TO_WLAN_DEVICE_WAKE

WLAN UART
2 OUT UART_WLAN_TO_AP_RXD
2 IN UART_AP_TO_WLAN_TXD
2 OUT UART_WLAN_TO_AP_CTS_L
2 IN UART_AP_TO_WLAN_RTS_L

BLUETOOTH UART
2 IN UART_AP_TO_BT_TXD
2 OUT UART_BT_TO_AP_RXD
2 IN UART_AP_TO_BT_RTS_L
2 OUT UART_BT_TO_AP_CTS_L

AOP
2 IN AOP_TO_WLAN_CONTEXT_A
2 IN AOP_TO_WLAN_CONTEXT_B

COEX
2 IN UART_BB_TO_WLAN_COEX
2 OUT UART_WLAN_TO_BB_COEX

ANTENNA
3 IO 50_UAT_WLAN_2G_SOUTH
3 IO 50_UAT_WLAN_5G_SOUTH
3 IO 50_LAT_WLAN_MLC

SymbolPorts

DRAWING TITLE: SCH,MLB,BOT,X891

Apple Inc.

DRAWING NUMBER: 051-02222 | SIZE: D
REVISION: 6.0.0
BRANCH: evt-1
PAGE: 1 OF 5
SHEET: 39 OF 41

NOTICE OF PROPRIETARY PROPERTY:
THE INFORMATION CONTAINED HEREIN IS THE PROPRIETARY PROPERTY OF APPLE INC.
THE POSESSOR AGREES TO THE FOLLOWING:
I TO MAINTAIN THIS DOCUMENT IN CONFIDENCE
II NOT TO REPRODUCE OR COPY IT
III NOT TO REVEAL OR PUBLISH IT IN WHOLE OR PART
IV ALL RIGHTS RESERVED

CONFIDENTIAL AND PROPRIETARY APPLE SYSTEM DESIGN. FOR REFERENCE PURPOSE ONLY - NOT A CHANGE REQUEST

WIFI/BT

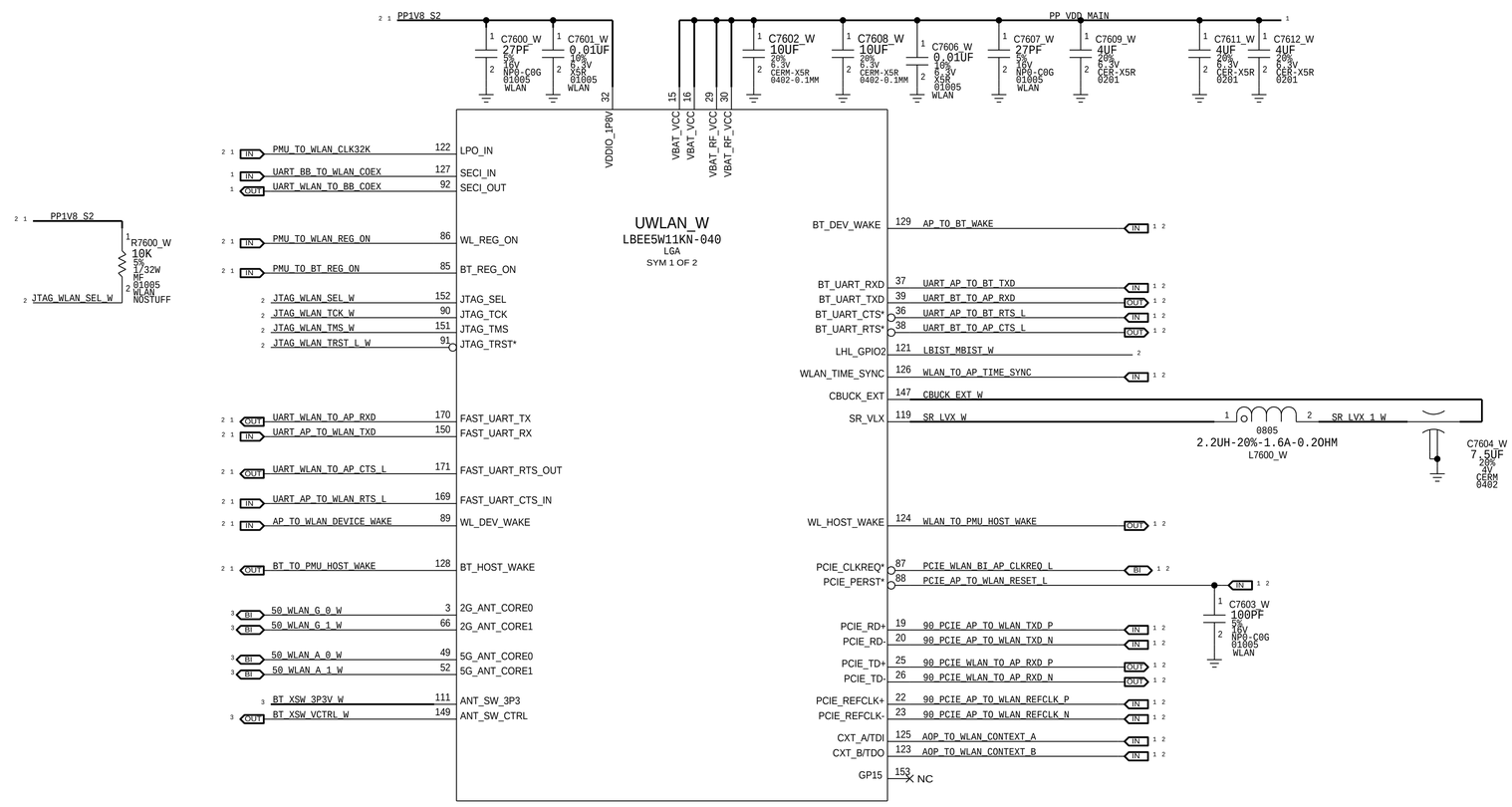

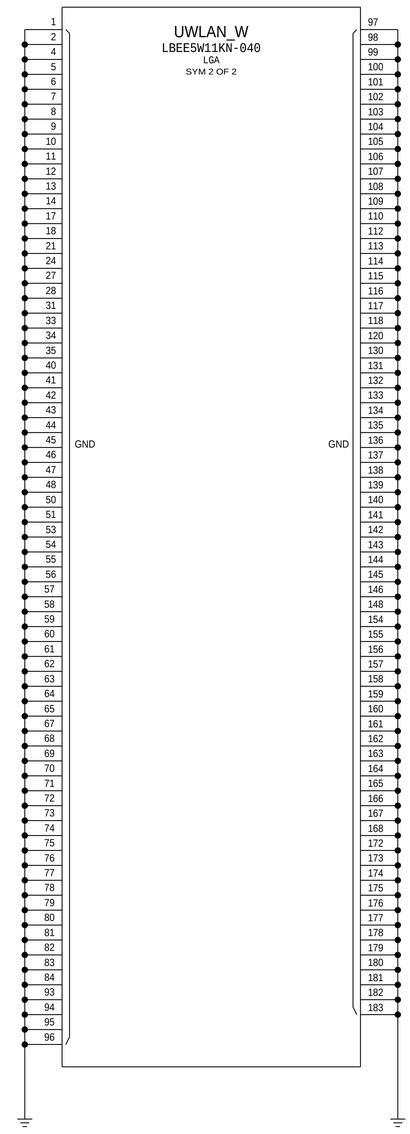

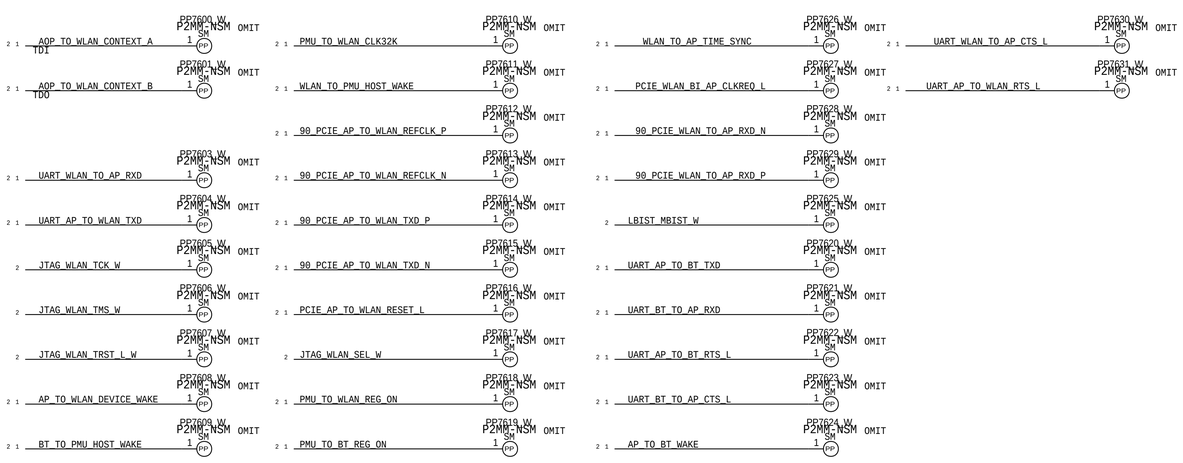

PART NUMBER	ALTERNATE FOR PART NUMBER	BOM OPTION	REF DES	COMMENTS:
998-10376	998-10147	BOM_TABLE_ALTS	UWLAN_W	USI ES6.1 WIFI MODULE

SYNC_MASTER=WIFI SYNC_DATE=01/30/2014

PAGE TITLE: Guinness

Apple Inc.

DRAWING NUMBER: 051-02222 SIZE: D

REVISION: 6.0.0

BRANCH: evt-1

PAGE: 4 OF 5

SHEET: 40 OF 41

NOTICE OF PROPRIETARY PROPERTY:
THE INFORMATION CONTAINED HEREIN IS THE PROPRIETARY PROPERTY OF APPLE INC.
THE POSESSOR AGREES TO THE FOLLOWING:
I TO MAINTAIN THIS DOCUMENT IN CONFIDENCE
II NOT TO REPRODUCE OR COPY IT
III NOT TO REVEAL OR PUBLISH IT IN WHOLE OR PART
IV ALL RIGHTS RESERVED

WIFI LOWER ANTENNA FEED

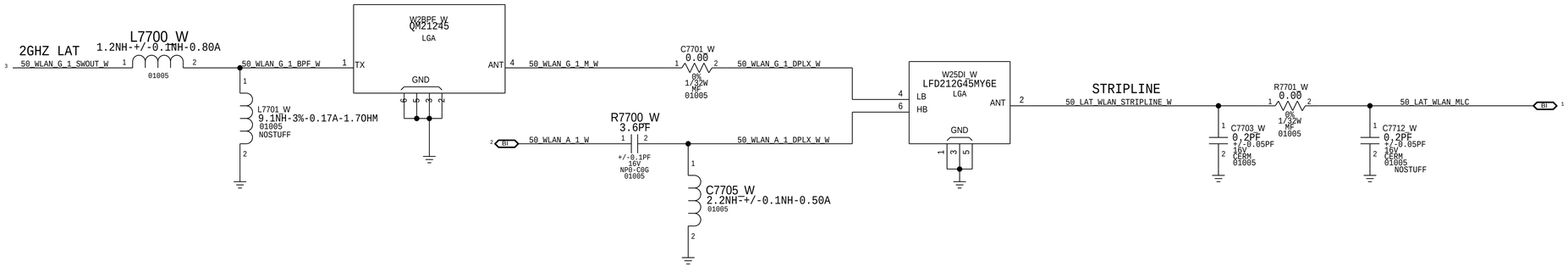

5GHZ WIFI UPPER ANTENNA FEED

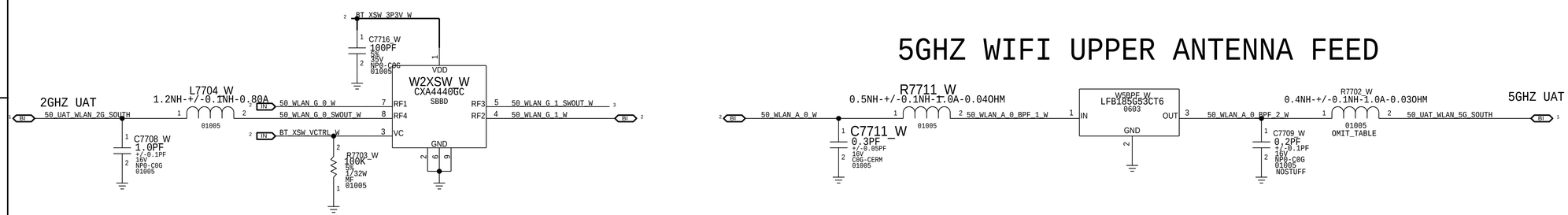

PART#	QTY	DESCRIPTION	REFERENCE DESIGNATOR(S)	CRITICAL	BOM OPTION
117S0161	1	5GHZ C0 BPF OUTPUT MATCH	R7702_W	CRITICAL	D221
152S00498	1	5GHZ C0 BPF OUTPUT MATCH	R7702_W	CRITICAL	ROW
152S00498	1	5GHZ C0 BPF OUTPUT MATCH	R7702_W	CRITICAL	JPN

PAGE TITLE
WiFiANTFeeds

Apple Inc.

DRAWING NUMBER 051-02222
SIZE D
REVISION 6.0.0
BRANCH evt-1
PAGE 5 OF 5
SHEET 41 OF 41

NOTICE OF PROPRIETARY PROPERTY:
THE INFORMATION CONTAINED HEREIN IS THE PROPRIETARY PROPERTY OF APPLE INC.
THE POSESSOR AGREES TO THE FOLLOWING:
I TO MAINTAIN THIS DOCUMENT IN CONFIDENCE
II NOT TO REPRODUCE OR COPY IT
III NOT TO REVEAL OR PUBLISH IT IN WHOLE OR PART
IV ALL RIGHTS RESERVED